Product Catalog 1999

REGISTERED ISO 9001 QUALITY
certificate № 0104

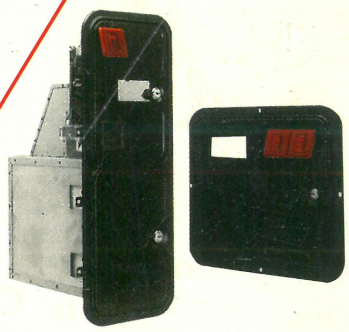

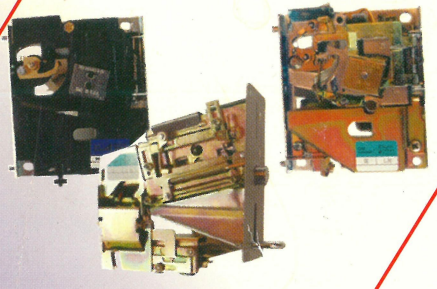

WELLS-GARDNER®
ELECTRONICS CORPORATION

WELLS-GARDNER
ELECTRONICS CORPORATION

WELLS-GARDNER
QUALITY POLICY STATEMENT

We are committed to:

- A totally satisfied customer
- Continuous improvement in all we do
- Involvement of each of us in reaching company goals
- Production of a quality product
- Partnerships with our customers and vendors
- Profitability to ensure our future

SERVICE CENTERS

AMA Distributors
1525 Airline Highway
Metaire, La. 70001
Phone: 504-835-3232
Fax: 504-835-9594

C.A. Robinson & Co.
180 Utah Avenue
S. San Francisco, Ca. 94080
Phone: 650-871-4280
Fax: 650-588-8538

Laniel Canada, Inc.
7101 Trans-Canadienne
S.-Laurent, Quebec H4T1A2
Phone: 514-336-5050
Fax: 514-332-1739

New England Coin-Op
232 Vanderbilt Avenue
Norwood, Ma. 02062
Phone: 800-274-6326
Fax: 781-762-8225

RBA Inc.
663 Orly Ave
Dorval, Quebec H9P1G1
CANADA
Phone: 514-336-5403
Fax: 514-733-2377

Trident Gaming PTY LTD
ACN 082 851 732 Lot 6 Pile Road
Somerby NSW 2250 AUSTRALIA
Phone 1-612-4340-4577
Fax 1-612-4340-4578

Wells-Gardner
2701 N. Kildare
Chicago, Il. 60639
Phone: 800-336-6630
Fax: 773-252-8299

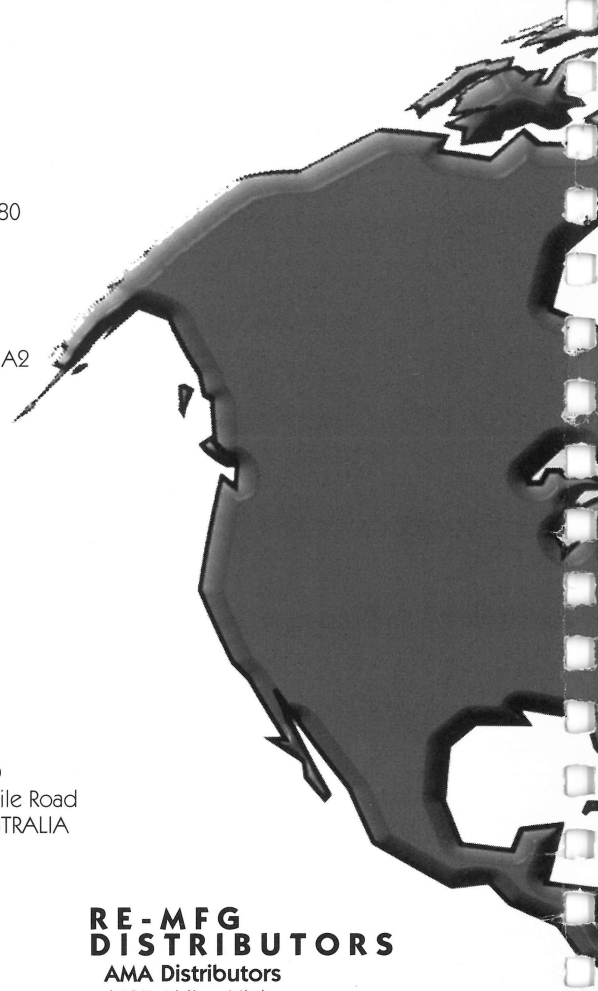

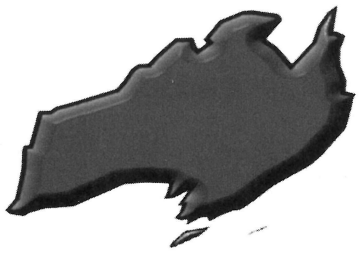

RE-MFG DISTRIBUTORS

AMA Distributors
1525 Airline Highway
Metaire, La. 70001
Phone: 504-835-3232
Fax: 504-835-9594

C.A. Robinson & Co.
180 Utah Avenue
S. San Francisco, Ca. 94080
Phone: 650-871-4280
Fax: 650-588-8538

James Industries
1619 Colonial Parkway
Inverness, Il. 60067
Phone: 847-358-8000
Fax: 847-358-7851

Mazzco
500 Eastern Avenue
Bensenville, Il. 60106
Phone: 800-292-4491
Fax: 800-671-2349

New England Coin-Op
232 Vanderbilt Avenue
Norwood, Ma. 02062
Phone: 800-274-6326
Fax: 617-762-8225

Trident Gaming PTY LTD
ACN 082 851 732 Lot 6 Pile Road
Somerby NSW 2250 AUSTRALIA
Phone 1-612-4340-4577
Fax 1-612-4340-4578

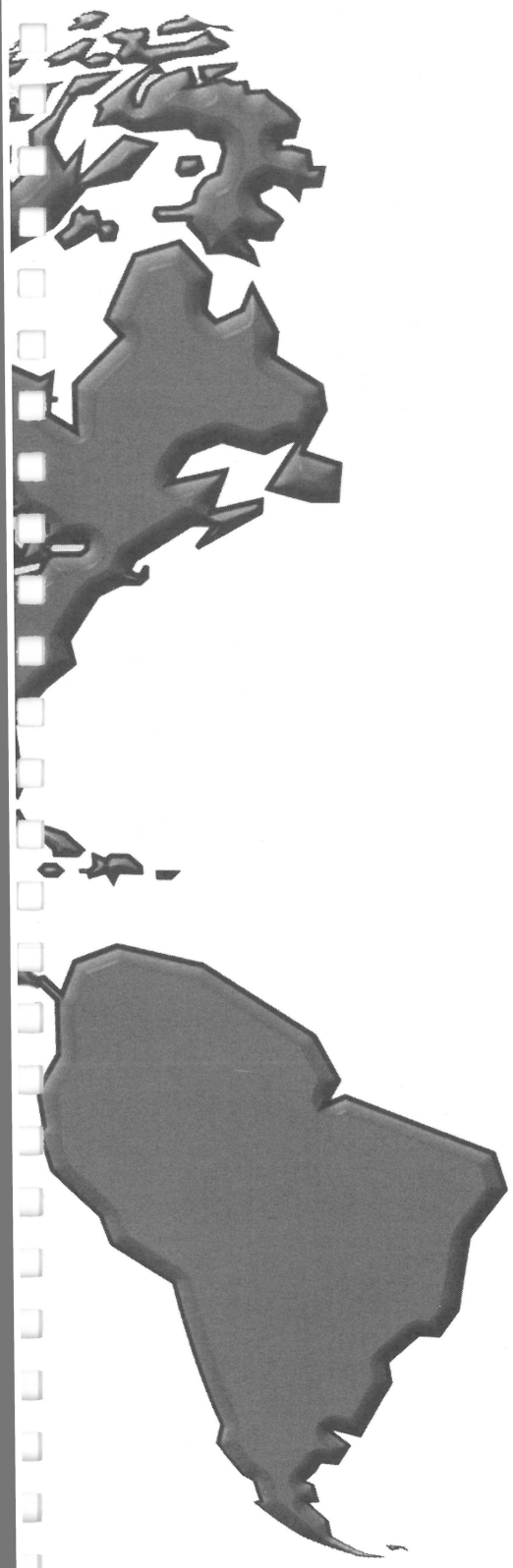

TABLE OF CONTENTS

I. **MONITORS AND PARTS**

K7000 Monitors
Standard Res/Mid Res 13", 19", 25", 27" 2

K7200 Monitors
Standard Res 13", 19" 12
WGR1372-S1GS54G 13" 19

K7300 Monitors
Standard Res 13", 19" 23

K7400 Monitors
Standard Res 25", 27" 30

K7500 Monitors
Mid Resolution 25", 27" 34

K7600 Monitors
Standard Res and Mid Resolution 39" 38

U3000 Monitors
M3330 & M3331 (Standard Res/Mid Res) 33" 40
M3930 (Standard Resolution) 39" 44
VGA/SVGA 14", 17", FS, 19" 46
Large Screen M2730 & M3332 27", 33" 52
M2830 Large VGA Screen 28" 57

U3100 Monitors
SVGA Resolution/ 14", 19" 59

U5000 Monitors
Standard Res/Mid Res 25", 27" 63

VideoStax
Presentation Monitors 71
Wall Monitors 74

PARTS
CRT Cross Reference 79
Chassis Cross Reference 82
Touch Sensor & Controller Cross Reference 86
Kits and Accessories 87
MicroTouch 88
ELO 90
Genie One 92
Product Manual Cross Reference 93

II. **COIN DOORS**
Mid-Sized Door 94
Over Under Doors: Dual Entry 96
Over/Under Doors: for Bill Validators 98
Interchangeable Over/Under Doors 102
Back Channel Assemblies 103
Standard Door II: Wide-Bodied Door 104
Mini Doors 106
Front Plate Assemblies 108
Ticket Dispenser/Bill Validator Door 110
Mechanical Coin Acceptors 112
Coin Door Accessories 114

III. **BILL VALIDATORS**
JCM, DBV-45/145/146 SU 116
JCM, DBV-10/20/30 118
MARS Bill Acceptor Series 2000 120

IV. **FLAT PANEL DISPLAYS**
LCD Flat Panel Display 122
Plasmavision 42" Flat Panel Display 124

V. **PLAYMASTER EXTREME** 126

VI. **LCD PROJECTORS**
PLV-20N 130
PLC-550M 132
PLC-5600N 134
PLC-9000N 136
PLC-SU10N 138
PLC-8810N 140
PLC-XR70N 142

VII. **CRT PROJECTORS**
PRO 900 Data Graphics Projector 144
Presentation Projector Accessories 146

VIII. **SERVICE CENTERS / REMFG. DISTRIBUTORS** 148

VIII. **TERMINOLOGY** 150

IX. **TERMS & CONDITIONS** 153

WELLS-GARDNER
ELECTRONICS CORPORATION

K7000

STANDARD RES

ISO 9001
certificate № 0104

K 7 0 0 0 0
PRODUCT SPECIFICATIONS

SPECIFICATIONS
- CRT size (diagonal measure): **13", 19", 25", 27"**
- Phosphor type: P22
- CRT etch: Polished faceplate; other faceplates available
- Striped trio spacing: 0.42mm & 0.63mm (13"), 0.71mm (19"), 0.84mm (25"), 0.84mm (27")

INPUT SIGNALS
- Input connector: 0.156 center header
- Video type: RGB analog
- Video input impedance: 4.7K Ohm; other values available
- Video level: 1 to 5 volts peak-to-peak; other levels optional
- Sync type: TTL sync; separate or composite, negative or positive
- Sync input impedance: 20K Ohm for positive, 12K Ohm for negative
- Horizontal sync frequency: 15.1 KHz
- Vertical sync frequency: 47 to 63 Hz

LIGHT OUTPUT
40 fL typical

GEOMETRY
- Horizontal linearity: +/-5%
- Vertical linearity: +/-5%
- Picture size regulation: 2%
- Geometric distortion: +/-2%

POWER INPUT
- Input voltage: 120 VAC, 50 - 60 Hz; isolation transformer required
- Maximum power: 85 Watts

USER CONTROLS
- Remote controls: Brightness, contrast, horizontal centering, vertical size, vertical centering, vertical hold
- Internal controls: Horizontal hold, horizontal size, horizontal raster position, focus

MECHANICAL
See additional pages

MISCELLANEOUS
- Operating temperature: 0 to 55 degrees C
- Agency compliance: U.L., C.S.A., D.H.H.S. radiation performance std

RESOLUTION
- Graphics modes: 640 X 200 (may be limited by the CRT)
- Video bandwidth: 12 MHz typical

SPECIFICATION SUBJECT TO CHANGE WITHOUT NOTICE

WELLS-GARDNER
ELECTRONICS CORPORATION

K 7 0 0 0
MECHANICAL SPECIFICATIONS

ISO 9001 REGISTERED QUALITY
certificate № 0104

DIMENSIONS SHOWN ARE FOR REFERENCE ONLY. FOR SPECIFICS CONTACT W.G.E.C. ENGINEERING.
2701 North Kildare Avenue Chicago, Illinois 60639 Phone (773) 252-8220 Fax (773) 252-8072

WG P/N: WGM1370-H0TS27C (not available)

Alternate: WGM1372-H0TS27G
WGZ1373-H0GS01H

Re-Mfg: WGR1370-H0TS27C

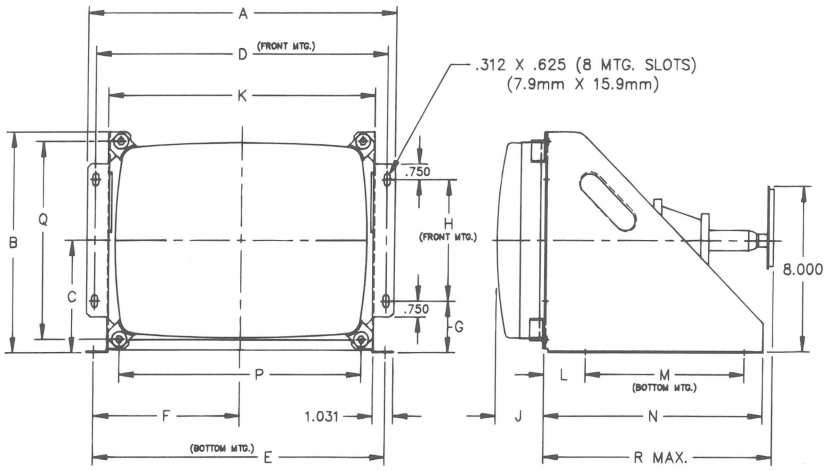

13V Color Monitor 13–H0 *(F13H)*

DIM.	A	B	C	D	E	F	G	H	J	K	L	M	N	P	Q	R
IN.	15.625	10.687	5.437	14.812	14.812	7.406	2.500	5.875	2.450	13.526	2.062	8.000	11.000	12.260	9.578	11.750
mm.	396.9	271.4	138.1	376.2	376.2	188.1	63.5	149.2	62.23	343.56	52.37	203.2	279.4	311.15	243.28	298.45

WG P/N: WGM1970-H0GS66A (not available)

Alternate: WGM1972-H0GS66H
WGZ1973-H0GS02H

Re-Mfg: WGR1970-H0GS66A

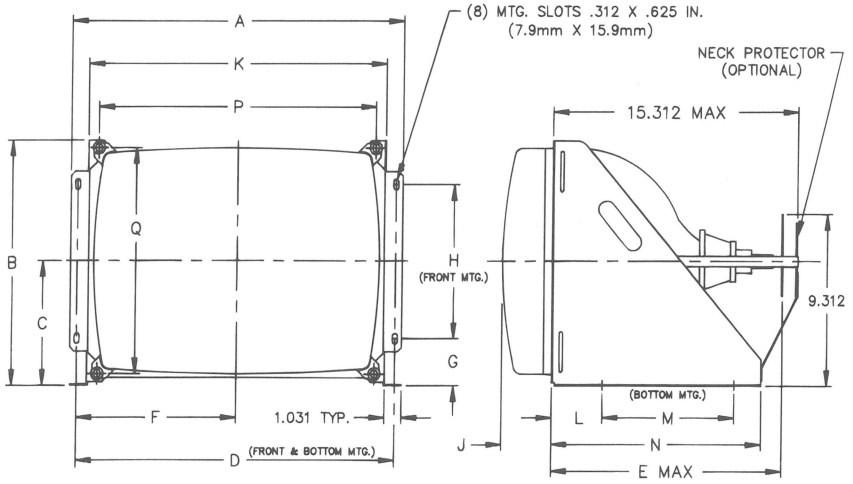

19V Color Monitor 19–H0 *(F19H)*

DIM.	A	B	C	D	E	F	G	H	J	K	L	M	N	P	Q
IN.	20.402	14.281	7.255	19.590	14.531	9.795	2.750	9.000	3.060	18.340	3.060	8.000	12.687	17.090	13.266
mm.	518.21	362.74	184.28	497.59	369.09	248.79	69.85	228.60	77.72	465.84	77.80	203.20	322.25	434.09	336.96

WELLS-GARDNER
ELECTRONICS CORPORATION

K 7 0 0 0
MECHANICAL SPECIFICATIONS

ISO 9001 REGISTERED QUALITY certificate № 0104

DIMENSIONS SHOWN ARE FOR REFERENCE ONLY. FOR SPECIFICS CONTACT W.G.E.C. ENGINEERING.
2701 North Kildare Avenue Chicago, Illinois 60639 Phone (773) 252-8220 Fax (773) 252-8072

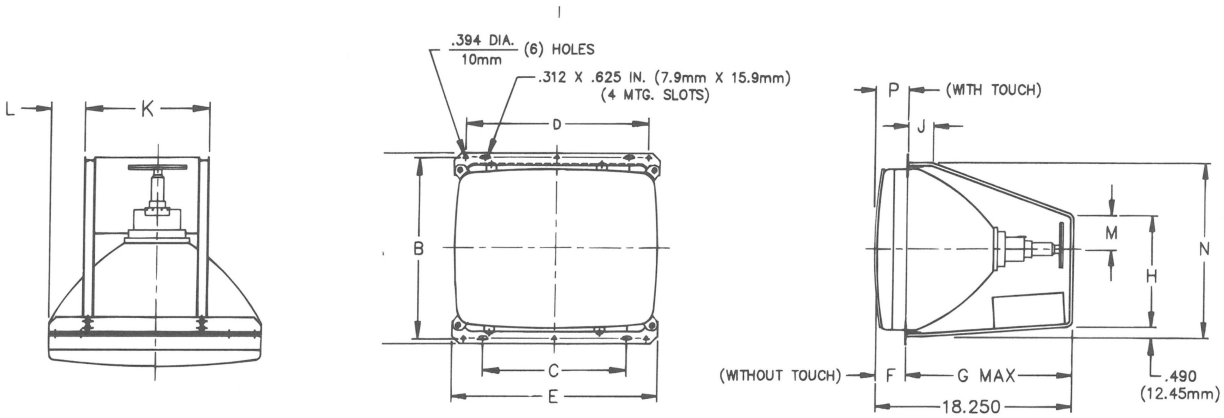

WG P/N: WGM1970-U2TS04A (not available) **Alternate:** WGM1972-U2GS49H, WGZ1973-U2GS14H **Re-Mfg:** WGR1970-U2TS04A

19V Color Monitor 19–U2 *(F19M2)*

DIM.	A	B	C	D	E	F	G	H	J	K	L	M	N	P
IN.	16.437	15.765	12.843	15.765	18.125	3.090	15.160	9.325	1.750	10.125	3.093	2.250	15.280	3.295
mm.	417.50	400.43	326.21	400.43	460.38	78.49	385.06	236.86	44.45	257.20	78.56	57.15	388.11	83.70

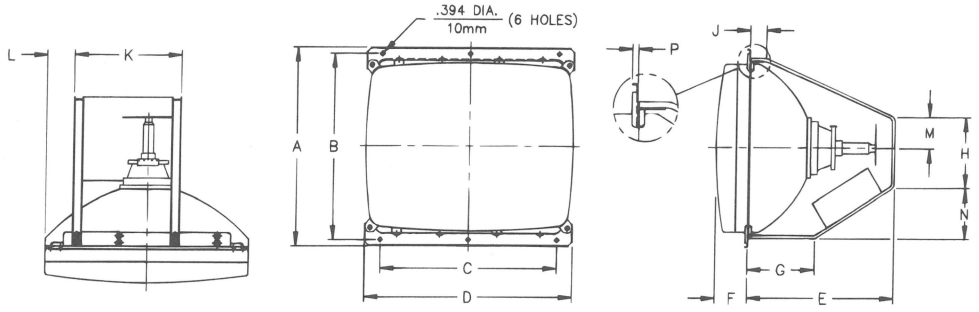

WG P/N: WGM2570-U1GS30K (not available) **Alternate:** WGM2574-U4GS55H **Re-Mfg:** WGR2570-U1GS30K

25V Color Monitor 25–U1 *(F25M1)*

DIM.	A	B	C	D	E	F	G	H	J	K	L	M	N	P
IN.	20.630	19.291	19.291	23.000	16.125	3.590	7.375	6.375	1.750	12.000	3.140	3.250	6.312	.343
mm.	524.0	490.0	490.0	584.20	409.58	91.19	187.33	161.93	44.45	304.80	79.76	82.55	160.33	8.71

WELLS-GARDNER
ELECTRONICS CORPORATION

K 7 0 0 0 0
MECHANICAL SPECIFICATIONS

ISO 9001 REGISTERED QUALITY certificate № 0104

DIMENSIONS SHOWN ARE FOR REFERENCE ONLY. FOR SPECIFICS CONTACT W.G.E.C. ENGINEERING.
2701 North Kildare Avenue Chicago, Illinois 60639 Phone (773) 252-8220 Fax (773) 252-8072

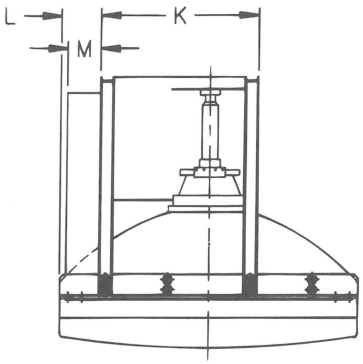

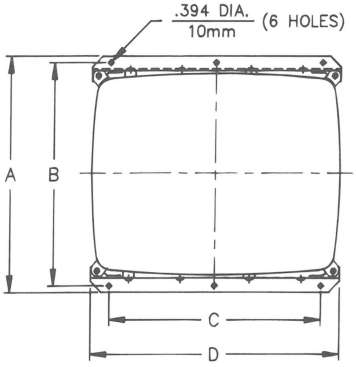

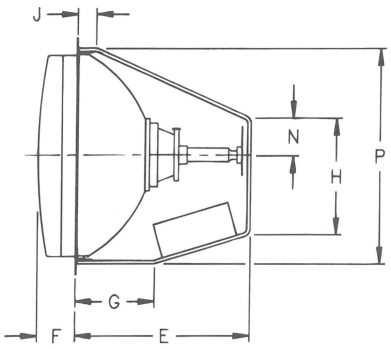

WG P/N: WGM2770-U0GS99A **Alternate:** WGM2774-U0GS08G **Re-Mfg:** WGR2770-U0GS99A

27V Color Monitor 27–U0 *(F27M)*

DIM.	A	B	C	D	E	F	G	H	J	K	L	M	N	P
IN.	21.937	20.644	20.6644	24.500	16.125	3.230	7.375	10.125	1.750	12.000	3.875	2.750	3.250	20.210
mm.	557.20	524.36	524.36	622.30	409,58	82.04	187.33	257.18	44.45	304.80	98.43	69.85	82.55	513.34

WELLS-GARDNER
ELECTRONICS CORPORATION

K 7 0 0 0
MONITOR CONTROLS

ISO 9001 REGISTERED QUALITY certificate № 0104

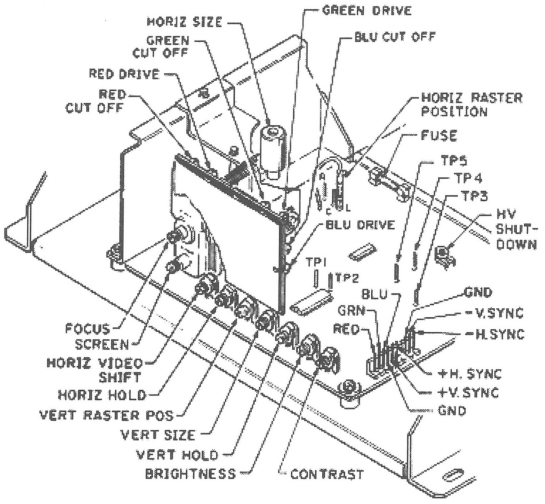

FIG. 1A

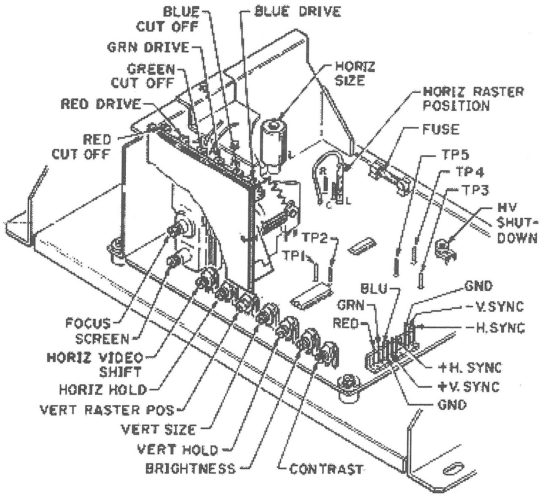

FIG. 1B

1. BRIGHTNESS CONTROL VR6
This control has been preset at the factory. However, when the video signal is applied to the monitor, a slight adjustment may be desired. Adjust this control such that the illumination is just barely extinguished from portions of the display which should be black.

2. CONTRAST CONTROL VR7
Adjust the contrast control for the desired picture intensity.

3. FOCUS CONTROL
Adjust the focus control, located on the high voltage unit (T1), for maximum over-all definition and fine picture detail.

4. HORIZONTAL HOLD CONTROL VR2
With the monitor being driven with the display signal, connect one jumper between TP1 and TP2 and another jumper between TP3 and TP4. Adjust the horizontal hold control until the picture stops sliding horizontally. Remove the jumpers. Do not use the horizontal hold control for horizontal centering. (See #5).

NOTE: If the sync signal is composite, use the horizontal sync input of the same polarity as the composite sync signal.

5. HORIZONTAL VIDEO SHIFT CONTROL VR1 Use this control to center the picture horizontally.

6. HORIZONTAL RASTER POSITION ADJUSTMENT
If the picture is off center horizontally (long dimension of picture tube), some compensation can be made by moving the horizontal raster position adjustment jumper either to positions "R" or "L".

7. HORIZONTAL SIZE COIL L1
The horizontal size coil is a hexagonal tuning tool adjustment. This control must be adjusted slowly, if necessary, until the picture or test pattern attains the correct horizontal proportions.

8. VERTICAL HOLD CONTROL VR5
Adjust this control until the picture stops rolling and it locks in vertically.

9. 50-60 Hz CONTROL VR9
This control is used to limit the range of vertical size. This control is preset at the factory and should not require readjustment unless the vertical size control or vertical hold control are readjusted from their original factory settings. I n order to set this control, first adjust the vertical size control so that the picture is slightly larger than desired. Turn VR9 so that any vertical foldover which may be present will disappear. If the monitor is to be operated alternately at more than one vertical frequency, then perform this adjustment at the higher frequency.

10. VERTICAL SIZE CONTROL
This control must be adjusted slowly, if necessary, until the picture or test pattern attains the correct vertical proportions.

11. VERTICAL RASTER POSITION CONTROL VR3
If the video is off center vertically, (short dimension of picture tube) some compensation can be made by turning the vertical raster position control.

12. CUT OFF AND DRIVE CONTROLS ON NECK BOARD VR201, VR202, VR203, VR204, VR205, VR206.
These controls have been preset at the proper gray scale. Before adjusting any of these controls, refer to Troubleshooting Note 4 and to the White Balance procedure.

WELLS-GARDNER
ELECTRONICS CORPORATION

K7000

GENERAL REPLACEMENT PARTS LIST For all K7000 models except where noted.This monitor contains circuits and components included specifically for safety purposes. For continued protection no changes should be made to the original design, and components shown in shaded areas of schematic, or ✇★ on parts list should be replaced with exact factory replacement parts.The use of substitute parts may create a shock fire, radiation or other hazard. Service should be performed by qualified personnel only.

ISO 9001 REGISTERED QUALITY
certificate № 0104

REPLACEMENT PARTS LIST

P447 MAIN BOARD

RESISTORS REF. NO.	PART NO.	DESCRIPTION
R1	340X2562-934	5.6K Ohm 5% 0.25W
R2	340X2562-934	5.6K Ohm 5% 0.25W
R3	340X2562-934	5.6K Ohm 5% 0.25W
R4	340X2472-934	4.7K Ohm 5% 0.25W
R5	340X2472-934	4.7K Ohm 5% 0.25W
R6	340X2472-934	4.7K Ohm 5% 0.25W
R7	340X2333-934	33K Ohm 5% 0.25
R8	340X2333-934	33K Ohm 5% 0.25
R9	340X2333-934	33K Ohm 5% 0.25
R10	340X2151-934	150 Ohm 5% 0.25W
R11	340X2151-934	150 O hm 5% 0.25W
R12	340X2151-934	150 Ohm 5% 0.25W
R13	340X2102-934	1.0K Ohm 5% 0.25W
R14	340X2102-934	1.0K Ohm 5% 0.25W
R15	340X2102-934	1.0K Ohm 5% 0.25W
R16	340X2822-934	8.2K Ohm 5% 0.25W
R17	340X2822-934	8.2K Ohm 5% 0.25W
R18	340X2152-934	1.5K Ohm 5% 0.25W
R19	340X2103-934	10K Ohm 5% 0.25W
R20	340X2102-934	1.0K Ohm 5% 0.25W
R21	340X2563-934	56K Ohm 5% 0.25W
R22	340X2562-934	5.6K Ohm 5% 0.25W
R23	340X2102-934	1.0K Ohm 5% 0.25W
R24	340X2224-934	220K Ohm 5% 0.25W
R25	340X2273-934	27K Ohm 5% 0.25W
R26	340X2822-934	8.2K Ohm 5% 0.25W
R27	340X2223-934	22K Ohm 5% 0.25W
R28	340X2332-934	3.3K Ohm 5% 0.25W
R29	340X2103-934	10K Ohm 5% 0.25W
R30	340X2101-934	100 Ohm 5% 0.25W
R31	340X2101-934	100 O hm 5% 0.25W
R32	340X2101-934	100 Ohm 5% 0.25W
R33	340X2102-934	1.0K Ohm 5% 0.25W
R34	340X2102-934	1.0K Ohm 5% 0.25W
R35	340X2102-934	1.0K Ohm 5% 0.25W
R36	340X2122-934	1.2K Ohm 5% 0.25W
R37	340X2822-934	8.2K Ohm 5% 0.25W
R38	340X2122-934	1.2K Ohm 5% 0.25W
R39	340X2122-934	1.2K Ohm 5% 0.25W

RESISTORS REF. NO.	PART NO.	DESCRIPTION
R40	340X2102-934	1.0K Ohm 5% 0.25W
R41	340X2102-934	1.0K Ohm 5% 0.25W
R42	340X2473-934	47K Ohm 5% 0.25W
R43	340X2222-934	2.2K Ohm 5% 0.25W
R44	340X2104-934	100K Ohm 5% 0.25W
R45	340X2104-934	100K Ohm 5% 0.25W
R46	340X2101-934	100 Ohm 5°h 0.25W
R47	340X2101-934	100 Ohm 5% 0.25W
R48	340X2102-934	1.0K Ohm 5% 0.25W
R49	340X2102-934	1.0K Ohm 5% 0.25W
R50	340X2103-934	10K Ohm 5% 0.25W
R51	340X2103-934	10K Ohm 5% 0.25W
R52	340X2102-934	1.0K Ohm 5% 0.25W
R53	340X2151-934	150 Ohm 5% 0.25W
R54	340X2224-934	220K Ohm 5% 0.25W
R55	340X2101-934	100 Ohm 5% 0.25W
R56	340X2472-934	4.7K Ohm 5% 0.25W
R57	340X2182-934	1.8K Ohm 5% 0.25W
R58	340X2123-934	12K Ohm 5% 0.25W
R59	340X2103-934	10K Ohm 5% 0.25W
R60	340X2563-934	56K Ohm 5% 0.25W
R61	340X2332-934	3.3K Ohm 5% 0.25W
R62	340X2122-934	1.2K Ohm 5% 0.25W
R63	340X2563-934	56K Ohm 5% 0.25W
R64	340X2184-934	180K Ohm 5% 0.25W
R65	340X2123-934	12K Ohm 5% 0.25W
R66	340X2224-934	220K Ohm 5% 0.25W
R67	340X2623-934	62K Ohm 5% 0.25W
R68	340X2223-934	22K Ohm 5% 0.25W
R69	340X3683-231	68K 5% 0.5W CAR
R70	340X2682-934	6.8K Ohm 5% 0.25
R71	340X3473-234	47K 5% 0.5W
R72	340X2101-934	100 Ohm 5% 0.25W
R73	340X2103-934	10K Ohm 5% 0.25W
R74	340X2220-934	22 Ohm 5% 0.25W
R75	340X2222-934	2.2K Ohm 5% 0.25W
R76	340X2473-934	47K Ohm 5% 0.25W
R77	340X2333-934	33K Ohm 5% 0.25
R78	340X2102-934	1.0K Ohm 5% 0.25W

TÜV Bauart PRODUCT SERVICE geprüft

WELLS-GARDNER
ELECTRONICS CORPORATION

K7000

GENERAL REPLACEMENT PARTS LIST For all K7000 models except where noted.This monitor contains circuits and components included specifically for safety purposes. For continued protection no changes should be made to the original design, and components shown in shaded areas of schematic, or ✇★ on parts list should be replaced with exact factory replacement parts.The use of substitute parts may create a shock fire, radiation or other hazard. Service should be performed by qualified personnel only.

REPLACEMENT PARTS LIST

P447 MAIN BOARD

ISO 9001 REGISTERED QUALITY certificate № 0104

RESISTORS

REF. NO.	PART NO.	DESCRIPTION
R80	340X3056-934	5.6 5% 0.5W
R81	340X2150-934	15 Ohm 5% 0.25W
R82	340X3821-934	820 Ohm 5% 0.5W
R83	340X3681-934	680 Ohm 5% 0.5W
R84	340X2682-934	6.8K Ohm 5% 0.25
R85	340X2332-934	3.3K Ohm 5% 0.25W
R86	340X2224-934	220K Ohm 5% 0.25W
R87	340X3334-844	330K 10% 0.5W
R88	340X4182-633	1.8K 5% 1 W
★ R89	043X0476-002	3.9K 5% 5W MO
R90	043X0486 002	1.2 5% 2W MF
R91	043X0486 002	1.2 5% 2W MF
R92	043X0486-002	1.2 5% 2W MF
R93	420X5102-324	1.0K 5% 2W
R94	340X2473-934	47K Ohm 5% 0.25W
R95	340X2473-934	47K Ohm 5% 0.25W
R96	420X6182-325	1.8K Ohm 5% 3W, WW
R97	420X6271-325	270 5% 3W
R98	340X4222-633	2.2K Ohm 5% 1 W
R99	340X4222-633	2.2K Ohm 5%1 W
R100	340X4271-633	270 5% 1W
R101	420X6682-325	6.8K 5% 3W
R102	340X4470-633	47 5% 1W
✇ ★ R103	043X0483-001	2.7 Ohm 5% 7W
R104	043X0484 001	15 Ohm 5% 5W
R105	043X0485-001	Thermister
R106	340X2273-934	27K Ohm 5% 0.25W
R107	340X2102-934	1.0K Ohm 5% 0.25W
R301	043X0481-003	220 Ohm 15W WW
VR1	040X0653-002	CTRL 500
VR2	040X0653-005	CTRL 10K
VR3	040X0653-005	CTRL 10K
VR4	040X0653-001	CTRL 200
VR5	040X0653-006	CTRL 200K
VR6	040X0653-003	CTRL 2K
VR7	040X0653-005	CTRL 10K
★ VR8	040X0639-006	Trim Pot 2K Ohm 0.3W
VR9	040X0655-001	Trim Pot 200 Ohm

CAPACITORS

REF. NO.	PART NO.	DESCRIPTION
C1	080X0099-671	Disc 22PF 10% NPO
C2	080X0099-671	Disc 22PF 10% NPO
C3	080X0099-671	Disc 22PF 10% NPO
C4	045X0577-501	Elect 10MF NP 25V
C5	045X0577-501	Elect 10MF NP 25V
C6	045X0577-501	Elect 10MF NP 25V
C7	047X0786-502	MYR .022 10% 50V
C8	047X0786-502	MYR .022 10% 50V
C9	047X0786-502	MYR .022 10% 50V
C10	045X0560-531	Elect 33MF 16V
C11	045X0560-534	Elect 22MF 25V
C12	045X0560-514	LYT 1.OUF 50V
C13	045X0560-534	Elect 22MF 25V
C14	047X0786-502	MYR.022 10% 50V
C15	047X0786-502	MYR.022 10% 50V
C16	047X0786-511	M YR .1 10% 50V
C17	047X0786-501	.010UF 10% 50V P-Estr
C18	045X0560-514	LYT 1.0UF 50V
C19	046X0550-502	PP .0056 2% AWS 50V
C20	045X0560-518	LYT 10UF 25V
C21	045X0560-518	LYT 10UF 25V
C22	045X0560-514	LYT 1.0UF 50V
C23	045X0560-517	LYT 47UF 25V
C24	047X0786-503	MYR.068 10% 50V
C25	047X0786-512	P-Ester .015 10% 50V
C26	047X0786-511	Myr.1 10% 50V
C27	080X0099-557	Disc 220 10% Z5F
C28	080X0098-048	5PF 20% 2KV NPO
C29	047X0786-501	.010UF 10% 50V P-Estr
C30	080X0099-505	Disc .001 20% Z5F 500V
C31	047X0786-501	.010UF 10% 50V P-Estr
C32	080X0099-580	Disc 100 10% Z5F 500V
C33	080X0099-722	Disc .0033 10% Y5P 500V
C34	080X0099-221	Disc .01 10% Y5P 500V
C35	047X0786-501	.010UF 10% 50V P-Estr
✇ ★ C36	046X0551-003	PP 6100 2% 1500V
C37	046X0544-005	.15 100V PP
★ C38	046X0536-046	.39UF 5% 200V PP

WELLS-GARDNER
ELECTRONICS CORPORATION

K7000

GENERAL REPLACEMENT PARTS LIST For all K7000 models except where noted.This monitor contains circuits and components included specifically for safety purposes. For continued protection no changes should be made to the original design, and components shown in shaded areas of schematic, or ✇★ on parts list should be replaced with exact factory replacement parts.The use of substitute parts may create a shock fire, radiation or other hazard. Service should be performed by qualified personnel only.

REPLACEMENT PARTS LIST

P447 MAIN BOARD

CAPACITORS

REF. NO.	PART NO.	DESCRIPTION
C40	045X0560-033	Elect 2200 35V
C41	080X0099-505	Disc .001 20% Z5F 500V
C42	045X0560-006	LYT 1000UF 16V
C43	080X0099-505	Disc .001 20% Z5F 500V
C44	046X0544-009	.1 10% 100V P-Prop
C45	045X0560-020	LYT 470UF 16V
C46	045X0560-020	LYT 470UF 16V
C47	080X0099-580	Disc 100 10% Z5F 500V
C48	045X0560-532	Elect 100MF 35V
V49	047X0786-501	.010UF 10% 50V P-Estr
C50	045X0560-023	LYT 1000UF 25V
C51	045X0525-512	Tan .68 10% 35V
C52	047X0786-501	.010UF 10& 50V P-Estr
C53	047X0786-514	.033UF 5% 50V P-Estr
C54	047X0786-515	MYR.022 5% 50V
C55	045X0578-001	Elect 560 200V
C56	045X0569-008	LYT 22UF 160V
C57	045X0569-011	Elect 47 160V
✇ C59	080X0099-724	Disc .0015 10% Y5P 500V
✇ C60	080X0099-723	Disc .0022 10% Y5P 500V
✇ C61	080X0099-723	Disc .0022 10% Y5P 500V
✇ C62	046X0552-001	.1 20% 125VAC
C63	047X0786-501	.010UF 10% 50V P-Estr

SEMICONDUCTORS

REF. NO.	PART NO.	DESCRIPTION
D1	066X0070-001	Diode 1N914B
D2	066X0070-001	Diode 1N914B
D3	066X0070-001	Diode 1 N914B
D4	066X0070-001	Diode 1N914B
D5	066X0070-001	Diode 1N914B
D6	066X0070-001	Diode 1N914B
D7	066X0070-001	Diode 1N914B
D8	066X0070-001	Diode 1N914B
D9	066X0070 001	Diode 1 N914B
D10	066X0070-001	Diode 1N914B
D11	066X0040-028	Zener Diode 5.1V 5% 0.5W
D12	066X0040-005	Zener Diode 10V 5% 0.5W

SEMICONDUCTORS

REF. NO.	PART NO.	DESCRIPTION
D13	066X0090-001	D 1 Fast SW RU -2
D14	066X 0090 001	D 1 Fast SW RU -2
★ D15	066X0090-001	D 1 Fast SW RU-2
D16	066X0090-001	D 1 Fa st SW RU -2
D17	066X0090-001	D 1 Fa st SW RU -2
D18	066X0084-001	Diode Sanyo GFE10R
✇ D19	066X0091-001	Diode SI 1A 600V
✇ D20	066X0091-001	Diode SI 1A 600V
✇ D21	066X0091-001	Diode SI 1A 600V
✇ D22	066X0091-001	Diode SI 1A 600V
D23	066X0091-001	Diode SI 1A 600V
D24	066X0091-001	Diode SI 1A 600V
D25	066X0089-001	D 1 Boost
Q1	086X0113-501	TRSTR NPN 2N3904
Q2	086X0113-501	TRSTR NPN 2N3904
Q3	086X0113-501	TRSTR NPN 2N3904
Q4	086X0113-501	TRSTR NPN 2N3904
Q5	086X0113-501	TRSTR NPN 2N3904
Q6	086X0113-501	TRSTR NPN 2N3904
Q7	086X0113-501	TRSTR NPN 2N3904
Q8	086X0113-501	TRSTR NPN 2N3904
Q9	086X0113-501	TRSTR NPN 2N3904
Q10	086X0185-501	TRSTR NPN CC
Q 11	086X0190-001	T RSTR 2S D 1398
ICI	086X0186-001	IC Video UPC1397 NEC
IC2	086X0187-001	IC Horiz Vert LA7823
IC3	086X0189-001	IC Vert Output UPC13978
✇ ★ IC4	086X0188-001	Regulator IC STR3123

TRANSFORMERS AND COILS

REF. NO.	PART NO.	DESCRIPTION
★ L1	009A2854-001	Coil Width-TODAI
★ L2	009A2855-001	Coil Lin-TODAI
✇ ★ T1	053X0528-001	Transf Flyback
T2	052X0131-001	Transf-Horiz Driver

WELLS-GARDNER
ELECTRONICS CORPORATION

K7000

GENERAL REPLACEMENT PARTS LIST For all K7000 models except where noted.This monitor contains circuits and components included specifically for safety purposes. For continued protection no changes should be made to the original design, and components shown in shaded areas of schematic, or ✇★ on parts list should be replaced with exact factory replacement parts.The use of substitute parts may create a shock fire, radiation or other hazard. Service should be performed by qualified personnel only.

REPLACEMENT PARTS LIST

P447 MAIN BOARD

MISCELLANEOUS

REF. NO.	PART NO.	DESCRIPTION
✇ F1	016X0176-001	Fuse 1.5A SB
	016X0182-001	Fuse Clip
P1	006A0428-001	Plug Header
P2	006A0428-001	Plug Header
P3	006A0427-001	Plug 2 Pin
P4	006A0406-001	Plug 4 Pin OSHIMA
P6	006A0429-005	Plug Header
J202	013X1243-001	Cable Assy 4 Wire 350mm

P456 NECK BOARD (used with CRT's with a 22.5mm neck diameter)

RESISTORS

REF. NO.	PART NO.	DESCRIPTION
R201	340X2272-934	Res 2.7K Ohm 5% 0.25W
R202	340X2151-934	Res 150 0hm 5% 0.25W
R203	340X2272-934	Res 2.7K Ohm 5% 0.25W
R204	340X2151-934	Res 150 0hm 5% 0.25W
R205	340X2272-934	Res 2.7K Ohm 5% 0.25W
R206	340X2151-934	Res 150 Ohm 5% 0.25W
R207	340X5682-633	Res 6.8K 2W MO
R208	340X5682-633	Res 6.8K 2W MO
R209	340X5682-633	Res 6.8K 2W MO
R210	340X3272-244	Res 2.7K Ohm 10% 0.5W
R211	340X3272-244	Res 2.7K Ohm 10% 0.5W
R212	340X3272-244	Res 2.7K Ohm 10% 0.5W
R213	340X5689-333	Res .68 Ohm 5% 2W
VR201	040X0653-003	CTRL 2K
VR202	040X0653-001	CTRL 200
VR203	040X0653-003	CTRL 2K
VR204	040X0653-001	CTRL 200
VR205	040X0653-003	CTRL 2K
VR206	040X0653-001	CTRL 200

CAPACITORS

REF. NO.	PART NO.	DESCRIPTION
C201	080X0090-006	Cap 470PF 10% Z5F CER
C202	080X0099-006	Cap 470PF 10% Z5F CER
C203	080X0099-006	Cap 470PF 10% Z5F CER
C204	080X0099-221	C Disc .01 10% Y5P 500V
C205	080X0099-225	C Disc.0015 1.5KV

SEMICONDUCTORS

REF. NO.	PART NO.	DESCRIPTION
Q201	086X0184-001	TRSTR 2SC2068LB/LBBK
Q202	086X0184-001	TRSTR 2SC2068LB/LBBK
Q203	086X0184-001	TRSTR 2SC2068LB/LBBK

MISCELLANEOUS

REF. NO.	PART NO.	DESCRIPTION
P202	006A0429-005	Plug Header
SKT201	003A0636-001	Pix Socket
J6	013X1243-001	Cable Assy 4 Wire 350mm
	030X0797-001	Plug V Pin

P448 NECK BOARD (Used with CRT's with a 29mm neck diameter)

Same as P456 NECK BOARD except:

SKT201	003A0651-001	SOC CRT

FINAL ASSEMBLY PARTS

REF. NO.	PART NO.	DESCRIPTION
	9K7700 SERIES (9")	
✇ ★	88XO218-506	CRT Toshiba A23JAN99X
★	9A2865-001	Deflection Yoke
	2AO690-001	Purity & Convergence Ring Assembly
	9A2864-001	Degaussing Coil Ass'bly
	8X0378-001	Rubber Wedge
	13K7800 SERIES (13")	
✇ ★	88X0236-506	CRT Orion A34JLLOOX
★	9A2860-001	Deflection Yoke
	2A0690-001	Purity & Convergence Ring Assembly
	9A2856-001	Degaussing Coil Ass'bly
	8X0378-001	Rubber Wedge
	19K7600 and 19K7900 SERIES (19")	
✇ ★	88X0237-506	CRT Phillips MVA48ABK05X
★	9A2862-001	Deflection Yoke
	2A0690-001	Purity 8 Convergence Ring Assembly
	9A2857-001	Degaussing Coil Ass'bly
	208X2400-901	Rubber Wedge
	25K7191 SERIES (25")	
✇★	88X0301-506	CRT Rauland A63ADG25X
★	9A2911-002	Deflection Yoke
	2A0684-001	Purity & Convergence Ring Assembly
	9A2938-001	Degaussinq Coil Ass'bly
	8X0374-001	Rubber Yoke Wedge

ISO 9001 REGISTERED QUALITY
certificate № 0104

REPLACEMENT PARTS LIST

25" K7000 Main PCB Assembly Replacement Parts List

CAPACITORS LOCATION/DESIGNATOR	DESCRIPTION	PART NO.
C52	CAP 0.02mF 10% 50V Poly Film	046X0550-003
C66	CAP 0.001 mF 20% 500V Z5F CER	080X0099-505
C69	CAP 0.0061 mF 2% 1600V Polyprop	046X0536-075
IC3	IC Vertical LA7831 Sanyo	086X0261-001

COILS LOCATION/DESIGNATOR	DESCRIPTION	PART NO.
LI	Coil width 45-200UH	009A2838-001
L2	Coil linearity	009A2813-011

MISCELLANEOUS LOCATION/DESIGNATOR	DESCRIPTION	PART NO.
R80	RES 3.9 Ohm 5% 1W MO/MF	340X4039-633
R83	RES 680 Ohm 10% 1/2W CC-AB	340X3681-844
R100	RES 820 Ohm 5% 1/2W CF	340X3821-934
R107	RES 1.2K Ohm 5% 1/4W CF	340X2122-934
R110	RES180K Ohm 5% 1/4W CF	340X2184-934
R112	RES 0.47 Ohm 5% 1/2W MO/MF	340X3479-631
R117	RES 680 Ohm 10% 1/2W CC-AB	340X3681-844
R141	RES 820 Ohm 5% 1/2W CF	340X3821-934
R149	RES 1 SK Ohm 5% 1/4W CF	340X2153-934

MISCELLANEOUS LOCATION/DESIGNATOR	DESCRIPTION	PART NO.
F1	Fuse 2A 250V SLO-BLO UL/CSA	016X0187-001
SKT201	Socket CRT 29mm	003A0636-002

WELLS-GARDNER
ELECTRONICS CORPORATION

K7200

STANDARD RES

K 7 2 0 0
PRODUCT SPECIFICATIONS

SPECIFICATIONS
- CRT size (diagonal measure): **13", 19"**
- Phosphor type: P22
- CRT etch: Polished faceplate; other faceplates available
- Striped trio spacing: 0.42mm & 0.63mm (13")
  0.71mm (19")

INPUT SIGNALS
- Input connector: 0.156 center headers
- Video type: RGB analog
- Video input impedance: 4.7K Ohm; other values available
- Video level: 1 to 5 volts peak-to-peak; other levels optional
- Sync type: TTL sync; separate or composite, negative or positive
- Sync input impedance: 20K Ohm for positive, 12K Ohm for negative
- Horizontal sync frequency: 15.75 KHz
- Vertical sync frequency: 47 to 63 Hz

LIGHT OUTPUT
40 fL typical

GEOMETRY
- Horizontal linearity: +/-5% max.
- Vertical linearity: +/-5% max.
- Picture size regulation: 2% max.
- Geometric distortion: +/-2% max.

POWER INPUT
- Input voltage: 90 - 264 VAC, 50 - 60 Hz; no isolation transformer required
- Maximum power: 70 Watts (19")

USER CONTROLS
- Remote controls: Brightness, contrast, horizontal centering, vertical size, vertical centering, vertical hold
- Internal controls: Horizontal hold, horizontal size, focus

MECHANICAL
See additional pages

MISCELLANEOUS
- Operating temperature: 0° to 55°C
- Agency compliance: U.L., C.S.A., D.H.H.S. radiation performance std., TUV.

RESOLUTION
- Graphics modes: 640 X 200 (may be limited by the CRT)
- Video bandwidth: 12 MHz typical

SPECIFICATION SUBJECT TO CHANGE WITHOUT NOTICE

ISO 9001 REGISTERED QUALITY
certificate № 0104

WELLS-GARDNER
ELECTRONICS CORPORATION

K 7 2 0 0
MECHANICAL SPECIFICATIONS

ISO 9001 certificate № 0104

DIMENSIONS SHOWN ARE FOR REFERENCE ONLY. FOR SPECIFICS CONTACT W.G.E.C. ENGINEERING.
2701 North Kildare Avenue Chicago, Illinois 60639 Phone (773) 252-8220 Fax (773) 252-8072

WG P/N: WGM1372-H0TS27G

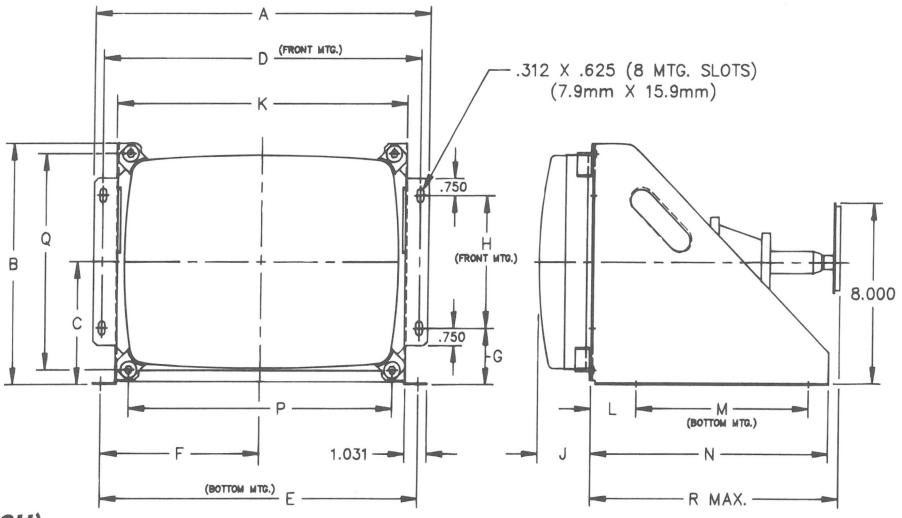

13V Color Monitor 13–H0 *(F13H)*

DIM.	A	B	C	D	E	F	G	H	J	K	L	M	N	P	Q	R
IN.	15.625	10.687	5.437	14.812	14.812	7.406	2.500	5.875	2.450	13.526	2.062	8.000	11.000	12.260	9.578	11.750
mm.	396.9	271.4	138.1	376.2	376.2	188.1	63.5	149.2	62.23	343.56	52.37	203.2	279.4	311.15	243.28	298.45

WG P/N: WGM1372-M1TM57F
WGM1372-M1TS30F
Inverted Picture for Merit

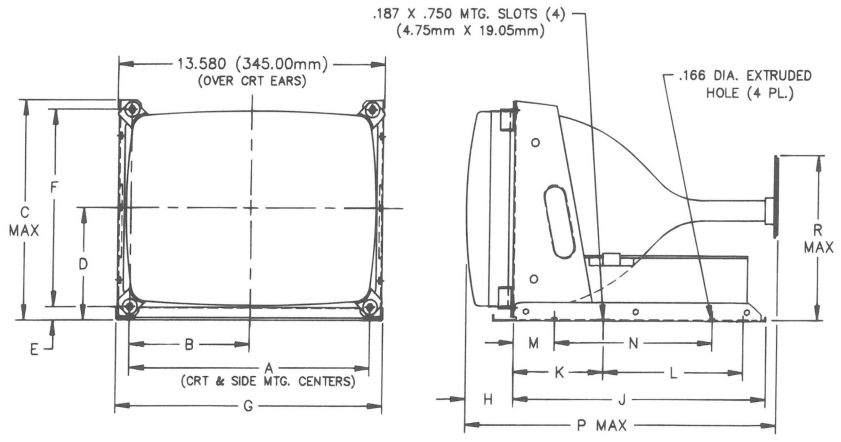

13V Color Monitor 13–M1 *(F13HM1)*

DIM.	A	B	C	D	E	F	G	H	J	K	L	M	N	P	R
IN.	12.260	6.130	10.673	5.334	.547	9.575	12.980	2.450	10.860	4.300	5.500	1.550	7.500	13.775	8.000
mm.	311.40	155.70	271.10	135.50	13.89	243.20	329.70	62.23	275.84	109.22	139.70	39.37	190.50	350.00	203.20

WELLS-GARDNER
ELECTRONICS CORPORATION

K 7 2 0 0
MECHANICAL SPECIFICATIONS

ISO 9001 certificate Nº 0104

DIMENSIONS SHOWN ARE FOR REFERENCE ONLY. FOR SPECIFICS CONTACT W.G.E.C. ENGINEERING.
2701 North Kildare Avenue Chicago, Illinois 60639 Phone (773) 252-8220 Fax (773) 252-8072

WG P/N: WGM1972-U2GS49H

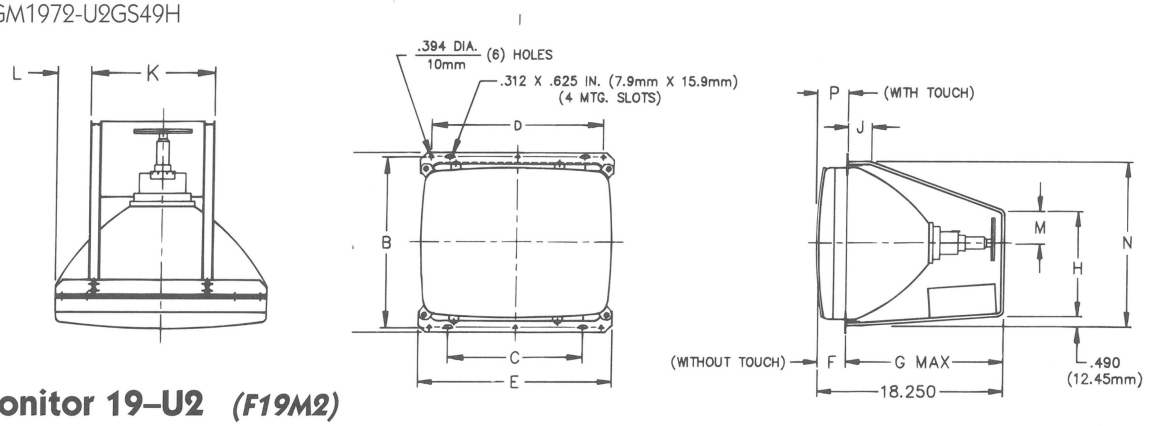

19V Color Monitor 19–U2 *(F19M2)*

DIM.	A	B	C	D	E	F	G	H	J	K	L	M	N	P
IN.	16.437	15.765	12.843	15.765	18.125	3.090	15.160	9.325	1.750	10.125	3.093	2.250	15.280	3.295
mm.	417.50	400.43	326.21	400.43	460.38	78.49	385.06	236.86	44.45	257.20	78.56	57.15	388.11	83.70

WG P/N: WGM1972-H0GS66H

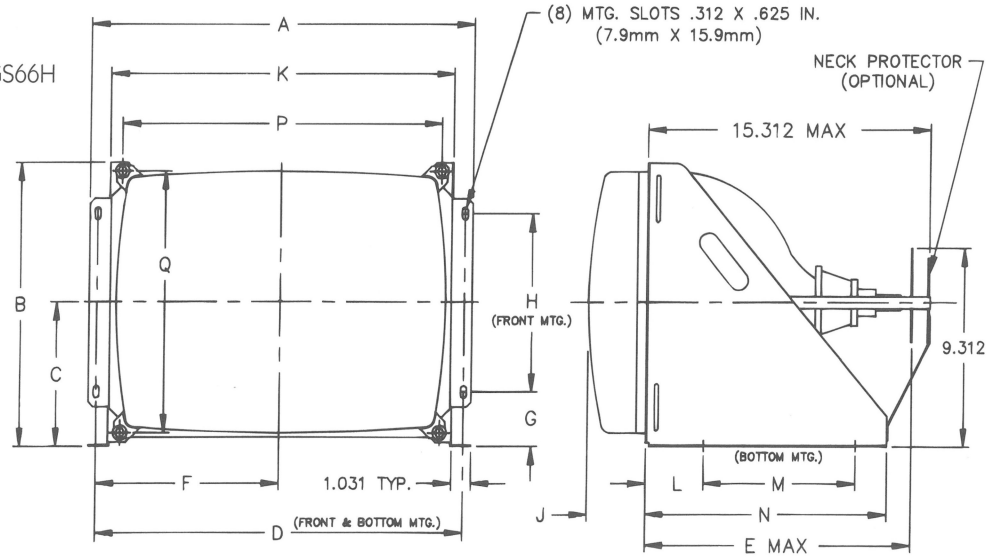

19V Color Monitor 19–H0 *(F19H)*

DIM.	A	B	C	D	E	F	G	H	J	K	L	M	N	P	Q
IN.	20.402	14.281	7.255	19.590	14.531	9.795	2.750	9.000	3.060	18.340	3.060	8.000	12.687	17.090	13.266
mm.	518.21	362.74	184.28	497.59	369.09	248.79	69.85	228.60	77.72	465.84	77.80	203.20	322.25	434.09	336.96

WELLS-GARDNER
ELECTRONICS CORPORATION

M O D E L
1 3 K 7 2 0 1

ISO 9001 certificate Nº 0104

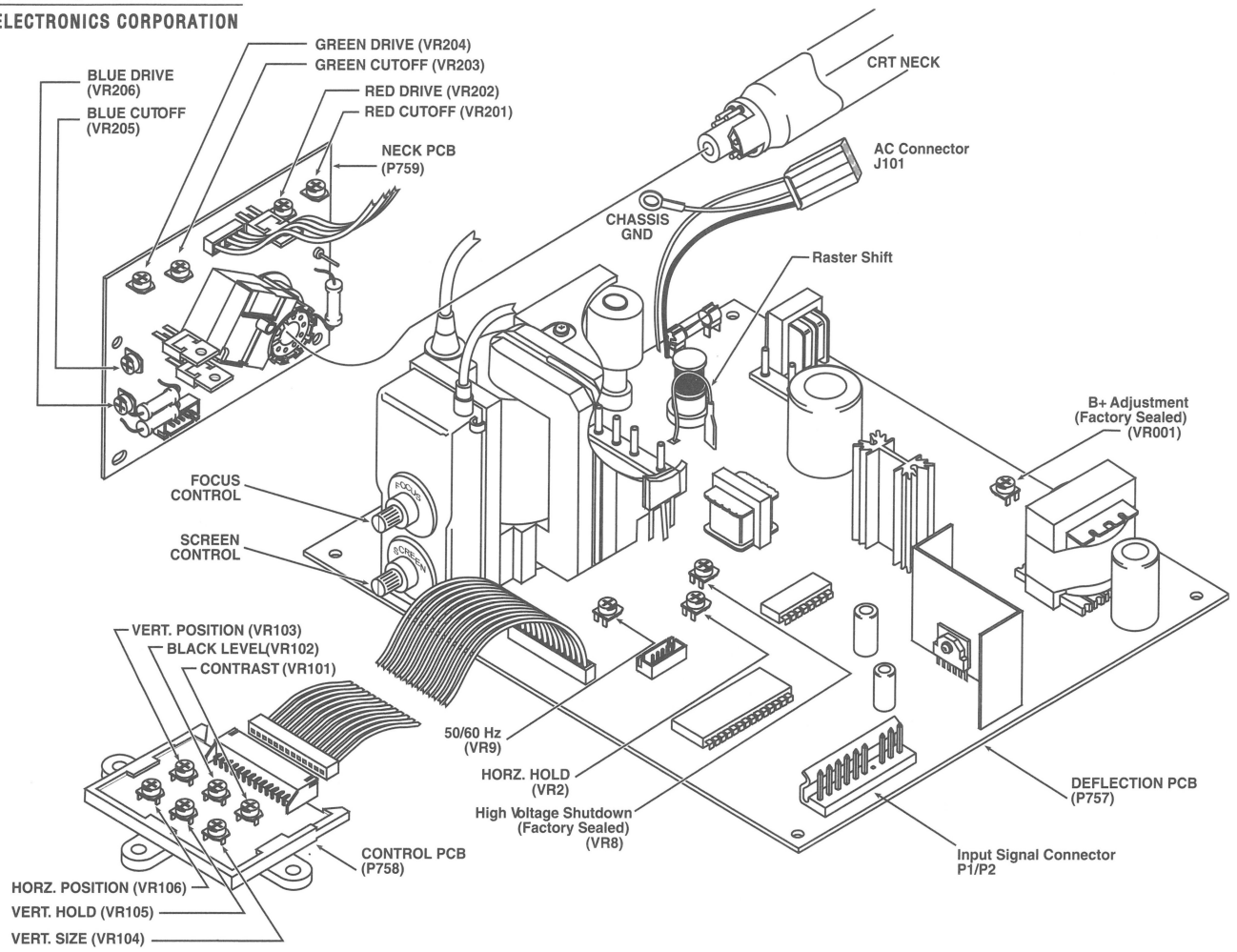

AC INPUT CONNECTOR: J101

Molex type 19-09-2039
Mating Molex type 19-09-1039

Pin	Description
1	AC hot
2	Earth ground
3	AC neutral

INPUT SIGNAL CONNECTOR: P1/P2

JST type B10P-VR
Mating Molex type 09-50-7101

PC Connector Pin	Description	Mating Connector Pin
1	Red	10
2	Green	9
3	Blue	8
4	Gnd	7
5	+ Vertical Sync	6
6	+ Horizontal Sync	5
7	Key	4
8	Gnd	3
9	- Vertical Sync	2
10	- Horizontal Sync	1

WELLS-GARDNER
ELECTRONICS CORPORATION

M O D E L
1 9 K 7 2 0 1

ISO 9001 REGISTERED QUALITY certificate № 0104

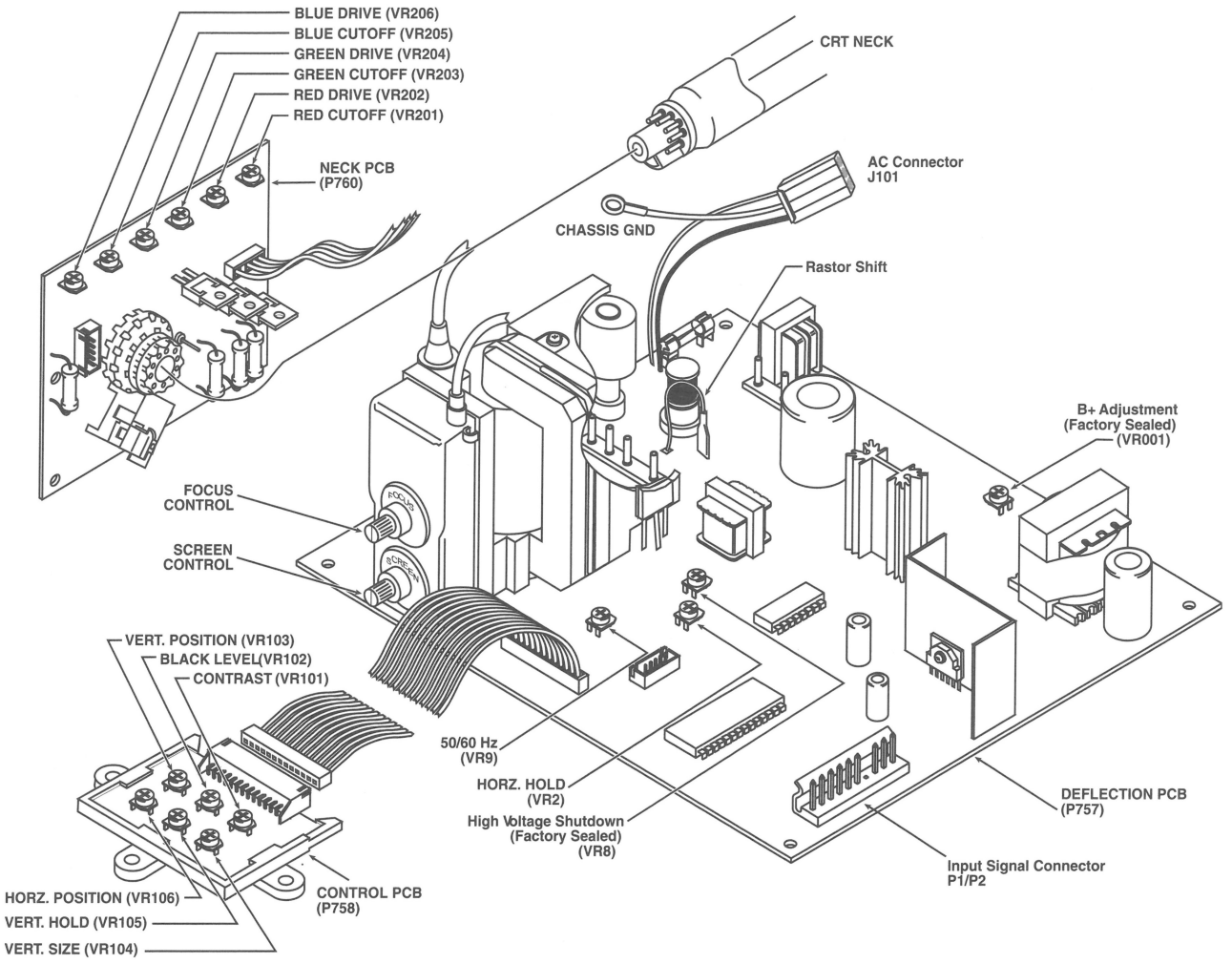

AC INPUT CONNECTOR: J101

Molex type 19-09-2039
Mating Molex type 19-09-1039

Pin	Description
1	AC hot
2	Earth ground
3	AC neutral

INPUT SIGNAL CONNECTOR: P1/P2

JST type B10P-VR
Mating Molex type 09-50-7101

PC Connector Pin	Description	Mating Connector Pin
1	Red	10
2	Green	9
3	Blue	8
4	Gnd	7
5	+ Vertical Sync	6
6	+ Horizontal Sync	5
7	Key	4
8	Gnd	3
9	- Vertical Sync	2
10	- Horizontal Sync	1

WELLS-GARDNER
ELECTRONICS CORPORATION

13K7201

ISO 9001 REGISTERED QUALITY
certificate № 0104

REPLACEMENT PARTS LIST

Main, Neck & Control PCB Assembly Parts List

DIODES

DESIGNATION	DESCRIPTION	PART NO.
D18	DIODE (DG 3) BY228 1.5KV	066X0151-001
D101	DIODE FUF5407 3A	066X0152-001
D101A	DIODE MUR460 4A 600V	066X0126-005
BD001	BRIDGE RECT KBJ406G 4A 600V	066X0153-001

INTEGRATED CIRCUITS

DESIGNATION	DESCRIPTION	PART NO.
U001	IC PWM UC3842AN	086X0257-001
IC1	IC LM1203N RGB VIDAMP	086X0270-001
IC2	IC LA7823 SANYO	086X0187-001
IC3	IC LA7833	086X0322-001

TRANSFORMERS

DESIGNATION	DESCRIPTION	PART NO.
T1	FLYBACK TRFMR K7200 13/19"	053X0641-001
T3	TRFMR EI-40	053X0648-001

TRANSISTORS

DESIGNATION	DESCRIPTION	PART NO.
Q002	TRSTR 2SK1507 FET	086X0356-001
Q10	TRSTR TOSH. NPN 2SC2482	086X0185-001
Q11	TRSTR SANYO 2SD1398	086X0190-001
Q201, Q202, Q203	TRSTR SANYO 2SC3782D NPN	086X0287-001

VARIABLE POTENTIOMETERS

DESIGNATION	DESCRIPTION	PART NO.
VR101	TRIM POT 10K OHM .15W	040X0711-009
VR102	TRIM POT 2K OHM .15W	040X0711-006
VR103	TRIM POT 30K OHM .15W	040X0711-011
VR104	TRIM POT 200 OHM .15W	040X0711-002
VR105	TRIM POT 500K OHM .15W	040X0711-016
VR106	TRIM POT 500 OHM .15W	040X0711-004

MISCELLANEOUS

DESIGNATION	DESCRIPTION	PART NO.
F001	FUSE 3.15A 5 X 20 IEC/UL SLO-BLO	016X0211-009
CRT	CRT, 13 INCH	088X0236-001
R012	RES .33 OHM 5% 2W	420X5339-323

WELLS-GARDNER
ELECTRONICS CORPORATION

ISO 9001
certificate № 0104

REPLACEMENT PARTS LIST

Main, Neck & Control PCB Assembly Parts List

DIODES

DESIGNATION	DESCRIPTION	PART NO.
D18	DIODE (DG 3) BY228 1.5KV	066X0151-001
D101	DIODE FUF5407 3A	066X0152-001
D101A	DIODE MUR460 4A 600V	066X0126-005
BD001	BRIDGE RECT KBJ406G 4A 600V	066X0153-001

INTEGRATED CIRCUITS

DESIGNATION	DESCRIPTION	PART NO.
U001	IC PWM UC3842AN	086X0257-001
IC1	IC LM1203N RGB VIDAMP	086X0270-001
IC2	IC LA7823 SANYO	086X0187-001
IC3	IC LA7833	086X0322-001

TRANSFORMERS

DESIGNATION	DESCRIPTION	PART NO.
T1	FLYBACK TRFMR K7200 13/19"	053X0641-001
T3	TRFMR EI-40	053X0648-001

TRANSISTORS

DESIGNATION	DESCRIPTION	PART NO.
Q002	TRSTR 2SK1507 FET	086X0356-001
Q10	TRSTR TOSH. NPN 2SC2482	086X0185-001
Q11	TRSTR SANYO 2SD1398	086X0190-001
Q201, Q202, Q203	TRSTR SANYO 2SC3782D NPN	086X0287-001

VARIABLE POTENTIOMETERS

DESIGNATION	DESCRIPTION	PART NO.
VR101	TRIM POT 10K OHM .15W	040X0711-009
VR102	TRIM POT 2K OHM .15W	040X0711-006
VR103	TRIM POT 30K OHM .15W	040X0711-011
VR104	TRIM POT 200 OHM .15W	040X0711-002
VR105	TRIM POT 500K OHM .15W	040X0711-016
VR106	TRIM POT 500 OHM .15W	040X0711-004

MISCELLANEOUS

DESIGNATION	DESCRIPTION	PART NO.
F001	FUSE 3.15A 5 X 20 IEC/UL SLO-BLO	016X0211-009
CRT	CRT, 19 INCH	088X0290-506
R012	RES .33 OHM 5% 2W	420X5339-323

WELLS-GARDNER
ELECTRONICS CORPORATION

K7200

STANDARD RESOLUTION

ISO 9001
REGISTERED QUALITY
certificate № 0104

WGR1372-S 1 G S 5 4 G
PRODUCT SPECIFICATIONS

SPECIFICATION
- CRT size (diagonal measure): 13"
- Phosphor type: P22
- CRT etch: Polished faceplate
- Striped trio spacing: 0.63mm (13").

INPUT SIGNALS
- Input connector: mates with Molex standard 15 position, .062", power receptacle
- Video type: RGB analog
- Video input impedance: 4.7K Ohm
- Video level:1 to 5 volts peak-to-peak negative going (jumper selectable for positive going)
- Sync type: TTL sync; separate or composite, negative or positive
- Sync input impedance: 20K Ohm for positive, 12K Ohm for negative
- Horizontal sync frequency: 15.75 KHz
- Vertical sync frequency: 47 to 63 Hz

LIGHT OUT PUT
40 fL typical

GEOMETRY
- Horizontal linearity: + 5%
- Vertical linearity: + 5%
- Picture size regulation: 2%
- Geometric distortion: + 2% max.

POWER INPUT
- Input voltage: 90-264 VAC, 50-60 Hz; no isolation transformer required
- Maximum power: 70 watts

USER CONTROLS
- Remote controls: Brightness, contrast, horizontal centering, vertical size, vertical centering, vertical hold
- Internal controls: Horizontal hold, horizontal size, focus.

MECHANICAL
See additional pages.

MISCELLANEOUS
- Operating temperature: 0 to 55 degree C.
- Agency compliance: IJL, CSA, DHHS radiation performance std., TUV.

RESOLUTION
- Graphics modes: 640 X 200
- Video bandwidth: 12 MHz typical.

SPECIFICATIONS SUBJECT TO CHANGE WITHOUT NOTICE

WELLS-GARDNER
ELECTRONICS CORPORATION

WGR1372-S1GS54G
MECHANICAL SPECIFICATIONS

ISO 9001 REGISTERED QUALITY certificate № 0104

DIMENSIONS SHOWN ARE FOR REFERENCE ONLY. FOR SPECIFICS CONTACT W.G.E.C. ENGINEERING.
2701 North Kildare Avenue Chicago, Illinois 60639 Phone (773) 252-8220 Fax (773) 252-8072

WG P/N: WGR 1372-S1GS 54G

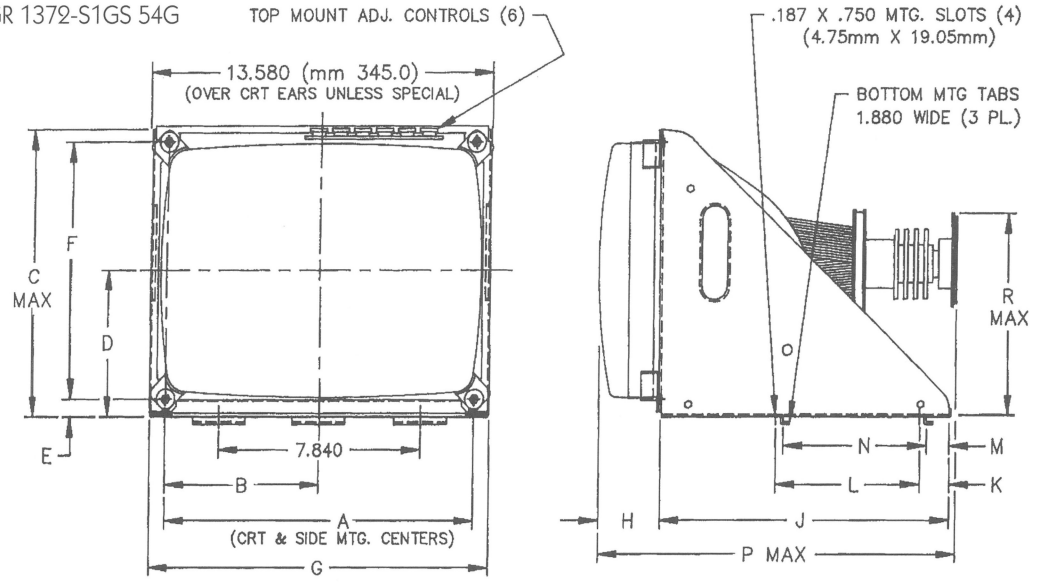

13V Color Monitor 13–M9

DIM.	A	B	C	D	E	F	G	H	J	K	L	M	N	P	R
IN.	12.220	6.110	10.642	5.354	.554	9.600	12.935	2.450	10.965	1.195	5.500	.825	5.662	13.562	7.500
mm.	310.39	155.19	270.31	135.99	14.07	243.84	328.55	62.23	278.51	30.35	139.70	20.96	143.82	344.48	190.50

WELLS-GARDNER
ELECTRONICS CORPORATION

M O D E L
WGR1372-S1GS54G

ISO 9001 REGISTERED QUALITY certificate № 0104

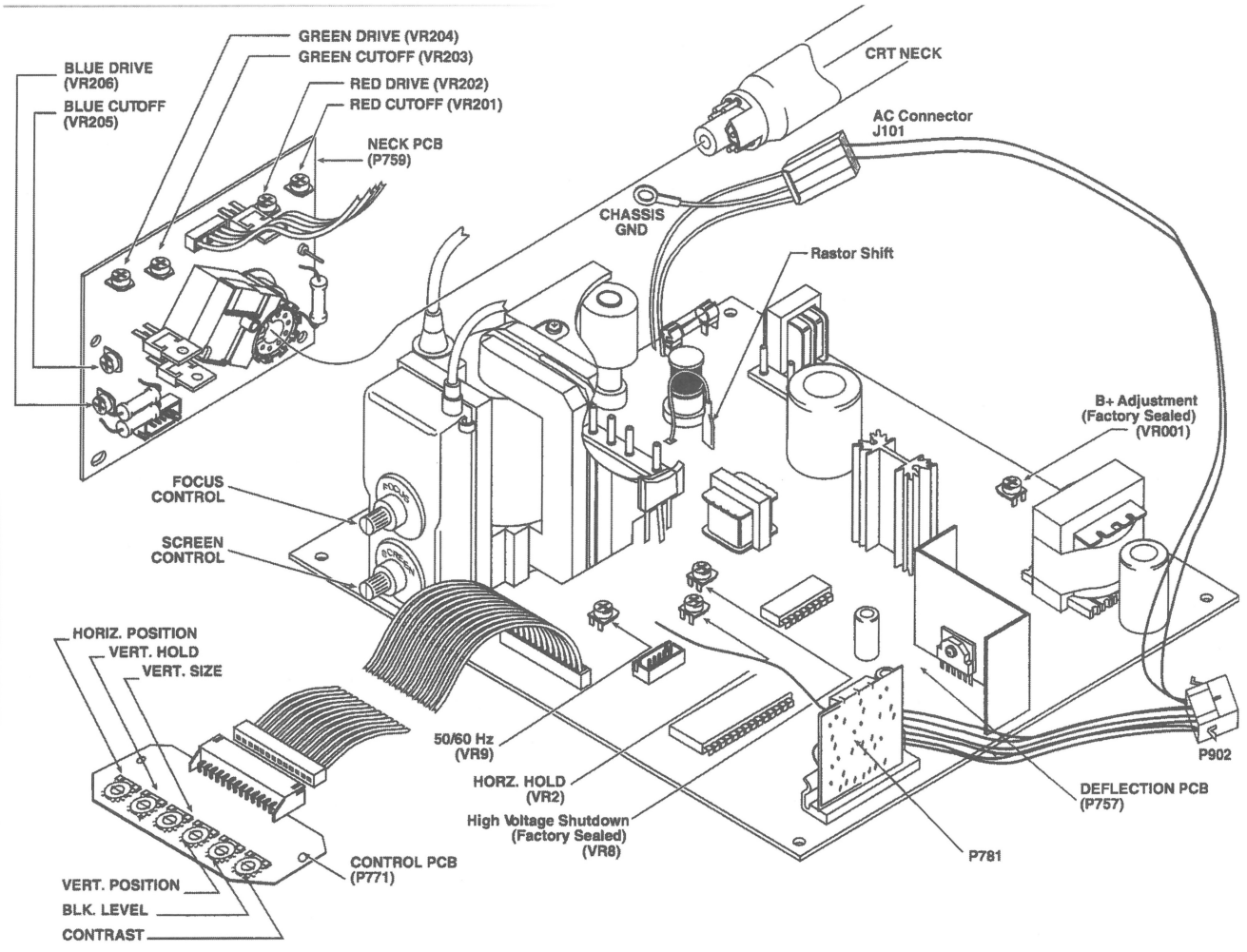

AC INPUT CONNECTOR: J101

Molex type 03-06-2151
Mating Molex type 03-06-1152

Pin	Description
1	Red
2	Blue
3	Green
4	+Vertical Sync
5	Gnd
6	+Horizontal Sync
7	- Vertical Sync
8	- Horizontal Sync
9-12	Blank
13	AC Hot
14	Blank
15	AC Neutral

WELLS-GARDNER
ELECTRONICS CORPORATION

ISO 9001 REGISTERED QUALITY
certificate № 0104

REPLACEMENT PARTS LIST

Main, Neck & Control PCB Assembly Parts List

DIODES

DESIGNATION	DESCRIPTION	PART NO.
D18	DIODE (DG 3) BY228 1.5KV	066X0151-001
D101	DIODE FUF5407 3A	066X0152-001
D101A	DIODE MUR460 4A 600V	066X0126-005
BD001	BRIDGE RECT KBJ406G 4A 600V	066X0153-001

INTEGRATED CIRCUITS

DESIGNATION	DESCRIPTION	PART NO.
U001	IC PWM UC3842AN	086X0257-001
IC1	IC LM1203N RGB VIDAMP	086X0270-001
IC2	IC LA7823 SANYO	086X0187-001
IC3	IC LA7833	086X0322-001

TRANSFORMERS

DESIGNATION	DESCRIPTION	PART NO.
T1	FLYBACK TRFMR K7200 13/19"	053X0641-001
T3	TRFMR EI-40	053X0648-001

TRANSISTORS

DESIGNATION	DESCRIPTION	PART NO.
Q002	TRSTR 2SK1507 FET	086X0356-001
Q10	TRSTR TOSH. NPN 2SC2482	086X0185-001
Q11	TRSTR SANYO 2SD1398	086X0190-001
Q201, Q202, Q203	TRSTR SANYO 2SC3782D NPN	086X0287-001

VARIABLE POTENTIOMETERS

DESIGNATION	DESCRIPTION	PART NO.
VR101	TRIM POT 10K OHM .2W	040X0590-022
VR102	TRIM POT 2K OHM .2W	040X0590-025
VR103	TRIM POT 25K OHM .2W	040X0590-024
VR104	TRIM POT 200 OHM .2W	040X0590-027
VR105	TRIM POT 500K OHM .2W	040X0590-023
VR106	TRIM POT 500 OHM .2W	040X0590-026

MISCELLANEOUS

DESIGNATION	DESCRIPTION	PART NO.
F001	FUSE 3.15A 5 X 20 IEC/UL SLO-BLO	016X0211-009
CRT	CRT, 13 INCH	088X0362-001
R012	RES .33 OHM 5% 2W	420X5339-323

WELLS-GARDNER
ELECTRONICS CORPORATION

K7300

STANDARD RES

ISO 9001
certificate № 0104

K 7 3 0 0
PRODUCT SPECIFICATIONS

SPECIFICATIONS
- CRT size (diagonal measure): **13", 19"**
- Phosphor type: P22
- CRT etch: Polished faceplate; other faceplates available
- Striped trio spacing: 0.63mm (13"), 0.71mm (19")

INPUT SIGNALS
- Input connector: 0.156 center headers
- Video type: RGB analog
- Video input impedance: 4.7k ohm; other values available
- Video level: 1 to 5 volts peak-to-peak; other levels optional
- Sync type: TTL sync; separate or composite, negative or positive
- Sync input impedance: 1k ohm for positive or negative
- Horizontal sync frequency: 15.75 kHz
- Vertical sync frequency: 47 to 63 Hz

LIGHT OUTPUT
50 fL typical

GEOMETRY
- Horizontal linearity: ±5% typ.
- Vertical linearity: ±7% typ.
- Picture size regulation: 2% max.
- Geometric distortion: ±2% max.

POWER INPUT
- Input voltage: 90 - 264 VAC, 50 - 60 Hz; no isolation transformer required
- Maximum power: 80 watts (19")

USER CONTROLS
- Remote controls: Brightness, contrast, horizontal centering, vertical size, vertical centering, vertical hold
- Internal controls: Horizontal hold, horizontal width, focus

MECHANICAL
See additional pages

MISCELLANEOUS
- Operating temperature: 0° to 55°C
- Agency compliance: U.L., C.S.A., D.H.H.S. radiation performance std., TUV.

RESOLUTION
- Graphics modes: 640 X 200 (may be limited by the CRT)
- Video bandwidth: 6 MHz typical

SPECIFICATIONS SUBJECT TO CHANGE WITHOUT NOTICE

WELLS-GARDNER
ELECTRONICS CORPORATION

K 7 3 0 0
MECHANICAL SPECIFICATIONS

ISO 9001 REGISTERED QUALITY certificate № 0104

DIMENSIONS SHOWN ARE FOR REFERENCE ONLY. FOR SPECIFICS CONTACT W.G.E.C. ENGINEERING.
2701 North Kildare Avenue Chicago, Illinois 60639 Phone (773) 252-8220 Fax (773) 252-8072

WG P/N: WGZ1373-H0GS01H

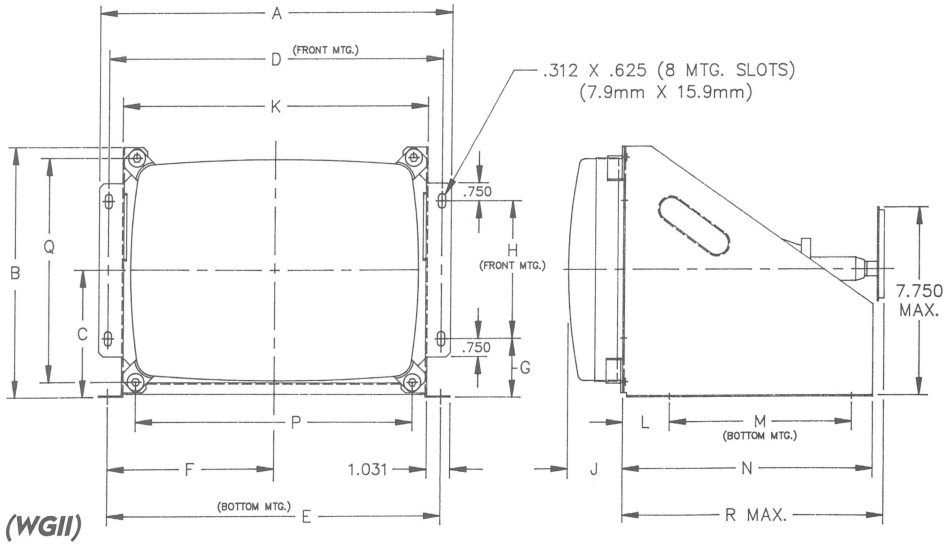

13V Color Monitor 13–H0 *(WGII)*

DIM.	A	B	C	D	E	F	G	H	J	K	L	M	N	P	Q	R
IN.	15.625	10.687	5.437	14.750	14.750	7.375	2.500	5.875	2.450	13.515	2.062	8.000	11.060	12.260	9.578	11.187
mm.	396.88	271.45	138.10	374.65	374.65	187.33	63.50	149.23	62.23	343.28	52.37	203.20	280.92	311.40	243.28	284.15

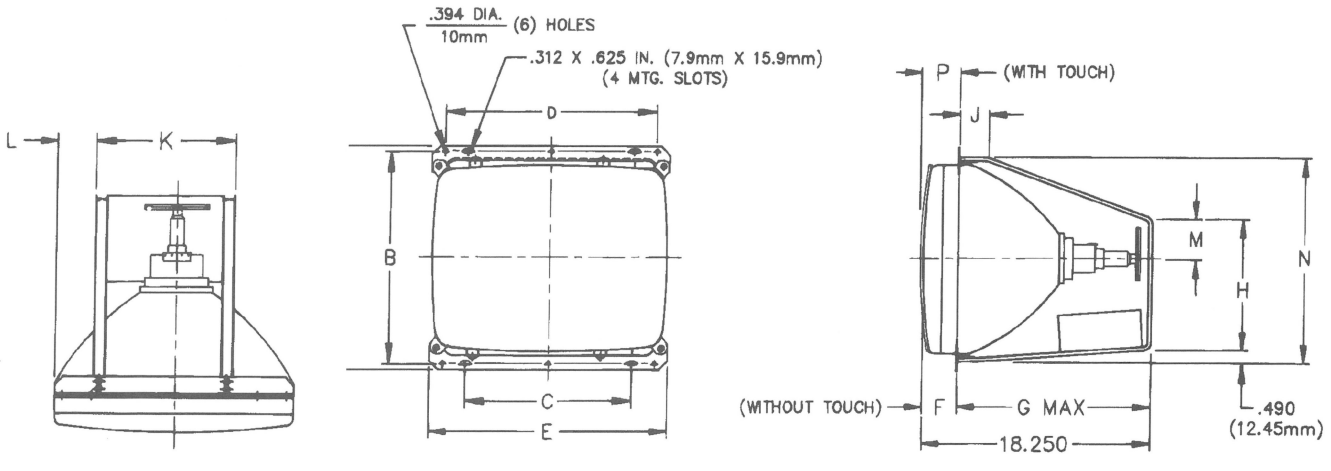

19V Color Monitor 19–U2 *(WGII)*

WG P/N: WGZ1973-U2GS14H

DIM.	A	B	C	D	E	F	G	H	J	K	L
IN.	16.437	15.765	12.843	15.765	18.125	3.090	15.160	9.325	1.750	10.125	3.093
mm.	417.50	400.43	326.21	400.43	460.38	78.49	385.06	236.86	44.45	257.20	78.56

WELLS-GARDNER
ELECTRONICS CORPORATION

K 7 3 0 0
MECHANICAL SPECIFICATIONS

ISO 9001 REGISTERED QUALITY certificate № 0104

DIMENSIONS SHOWN ARE FOR REFERENCE ONLY. FOR SPECIFICS CONTACT W.G.E.C. ENGINEERING.
2701 North Kildare Avenue Chicago, Illinois 60639 Phone (773) 252-8220 Fax (773) 252-8072

WG P/N: WGZ1973-H0GS02H

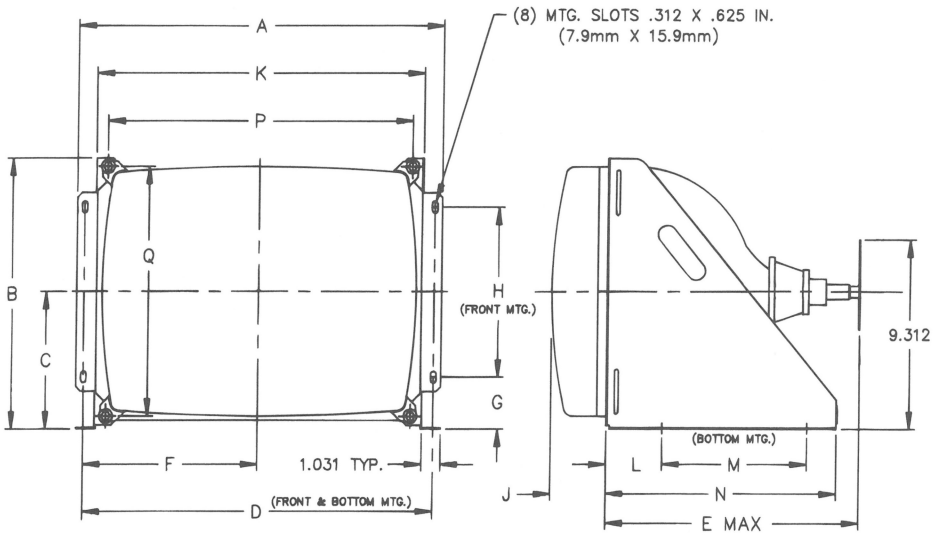

19V Color Monitor 19–H0 *(WGII)*

DIM.	A	B	C	D	E	F	G	H	J	K	L	M	N	P	Q
IN.	20.450	14.360	7.255	19.640	14.531	9.820	2.750	9.000	3.060	18.390	3.063	8.000	12.687	17.090	13.266
mm.	519.43	364.74	184.28	498.86	369.09	249.43	69.85	228.60	77.72	467.11	77.80	203.20	322.25	434.09	336.96

WELLS-GARDNER
ELECTRONICS CORPORATION

MODEL 13K7301

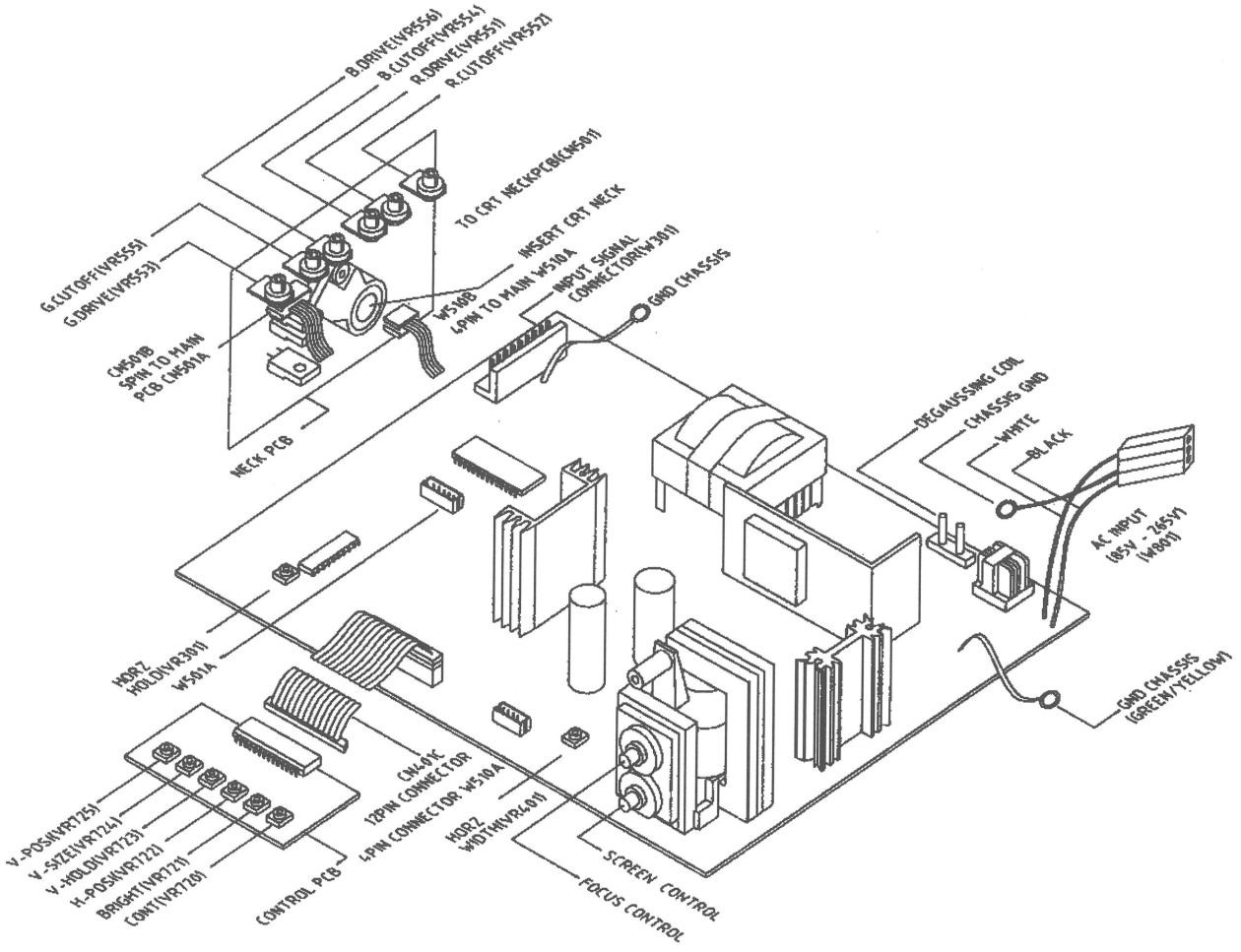

AC INPUT CONNECTOR: W801

Molex type 3191-03P 1
Mating Molex type 19-09-1039

Pin	Description
1	AC hot
2	Earth ground
3	AC neutral

INPUT SIGNAL CONNECTOR: W301

Hanlim type LW1143-10
Mating Molex type 09-50-7101

PC Connector Pin	Description
1	Red
2	Green
3	Blue
4	Gnd
5	Vertical Sync
6	Horizontal Sync
7	Key TAB
8	Gnd
9	- Vertical Sync
10	- Horizontal Sync

WELLS-GARDNER
ELECTRONICS CORPORATION

M O D E L
1 9 K 7 3 0 2

ISO 9001 REGISTERED QUALITY certificate № 0104

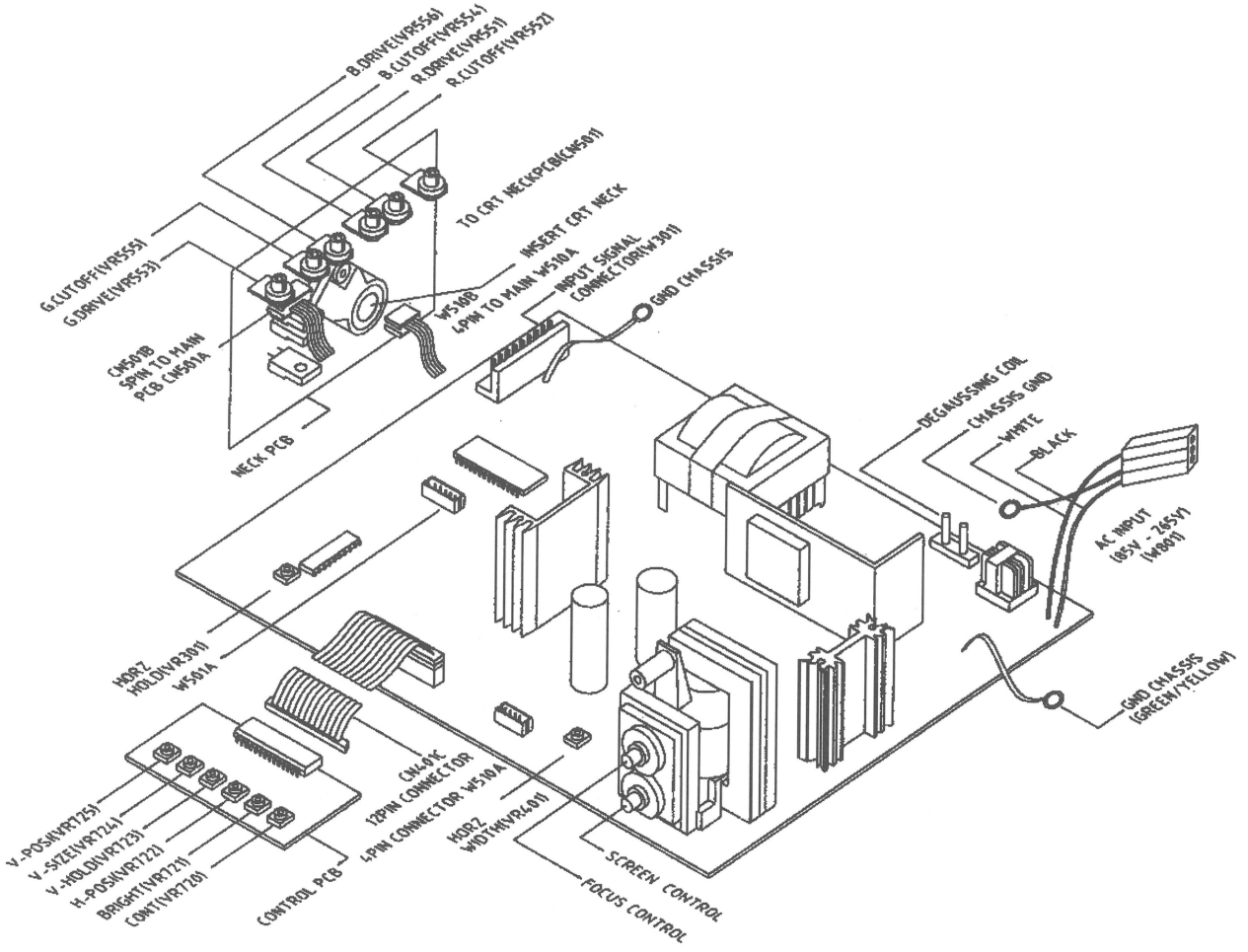

AC INPUT CONNECTOR: W801

Molex type 3191-03P 1
Mating Molex type 19-09-1039

Pin	Description
1	AC hot
2	Earth ground
3	AC neutral

INPUT SIGNAL CONNECTOR: W301

Hanlim type LW1143-10
Mating Molex type 09-50-7101

PC Connector Pin	Description
1	Red
2	Green
3	Blue
4	Gnd
5	Vertical Sync
6	Horizontal Sync
7	Key TAB
8	Gnd
9	- Vertical Sync
10	- Horizontal Sync

WELLS-GARDNER
ELECTRONICS CORPORATION

13K7301

REPLACEMENT PARTS LIST

Main, Neck & Control PCB Assembly Parts List

DIODES DESIGNATION	DESCRIPTION	PART NO.
D801	BRIDGE PBS156GU-CD	BS15GU--CD
D810	DIODE RU3AM	DDRU3AM--N
D811	ZENER UZ5.. I B	DZUZ-5.1 BT
D361	ZENER 22BSC(1%)	DZUZ-22BSC
D402	DIODE RH4F	DDRH4F---N
D403	DIODE RU4AM	DDRU4AM--N

INTEGRATED CIRCUITS DESIGNATION	DESCRIPTION	PART NO.
1801	PC 123Y5	UPC817---N
I802	STR-S6707	USTRS6707N
1803	KIA7812	TKIA7812-N
I201	GL1162	UGL] 162--N
I301	LA7851	ULA7851--N
1302	LA7833	ULA7833--N

TRANSFORMERS DESIGNATION	DESCRIPTION	PART NO.
Q360	2N4401	T2N4401 --N
Q401	KTC3207	TKTC3207 N
Q402	2SC4769-2/3	T2SC4769- *
Q802	SE 120N	USE 120N--N

TRANSISTORS DESIGNATION	DESCRIPTION	PART NO.
L801	LF304	5CL31LF304
T801	TSM-708	5CL61 SM708
T402	DNF-FA2019(19")	5CL4120190
T402	DNF-FC1426(13")	5CL4114260

VARIABLE POTENTIOMETERS DESIGNATION	DESCRIPTION	PART NO.
VR301	HO6 2KB	5NR3H06202
VF401	HO6 50KB	5NR3H06503
VR551	V06 200B	5NR3V09201
VR552	V06 2K	5NR3V09202
VR553	V06 200B	5NR3V09201
VR554	V06 2K	5NR3V09202
VR555	V06 2K	5NR3V09202
VR556	V06 200B	5NR3V09201
VF720	HO6 200KB	5NR3H09204
VR721	HO6 200KB	5NR3H09204
VR722	HO6 10KB	5NR3H09103
VR723	HO6 200KB	5NR3H09204
VR724	HO6 500B	5NR3H09501
VR725	HO6 1 OKB	5NR3H09103

MISCELLANEOUS DESIGNATION	DESCRIPTION	PART NO.
F801	250V3.15A	5NS3224002
SC01	CPT SOCKET (13")	4CT41SS203
SC01	CPT SOCKET (19")	4CT41SS143

WELLS-GARDNER
ELECTRONICS CORPORATION

19K7302

REPLACEMENT PARTS LIST

Main, Neck & Control PCB Assembly Parts List

DIODES DESIGNATION	DESCRIPTION	PART NO.
D801	BRIDGE PBS156GU-CD	BS15GU--CD
D810	DIODE RU3AM	DDRU3AM--N
D811	ZENER UZ5.. I B	DZUZ-5.1 BT
D361	ZENER 22BSC(1%)	DZUZ-22BSC
D402	DIODE RH4F	DDRH4F---N
D403	DIODE RU4AM	DDRU4AM--N

INTEGRATED CIRCUITS DESIGNATION	DESCRIPTION	PART NO.
1801	PC 123Y5	UPC817---N
I802	STR-S6707	USTRS6707N
1803	KIA7812	TKIA7812-N
I201	GL1162	UGL] 162--N
I301	LA7851	ULA7851--N
1302	LA7833	ULA7833--N

TRANSFORMERS DESIGNATION	DESCRIPTION	PART NO.
Q360	2N4401	T2N4401 --N
Q401	KTC3207	TKTC3207 N
Q402	2SC4769-2/3	T2SC4769- *
Q802	SE 120N	USE 120N--N

TRANSISTORS DESIGNATION	DESCRIPTION	PART NO.
L801	LF304	5CL31LF304
T801	TSM-708	5CL61 SM708
T402	DNF-FA2019(19")	5CL4120190
T402	DNF-FC1426(13")	5CL4114260

VARIABLE POTENTIOMETERS DESIGNATION	DESCRIPTION	PART NO.
VR301	HO6 2KB	5NR3H06202
VF401	HO6 50KB	5NR3H06503
VR551	V06 200B	5NR3V09201
VR552	V06 2K	5NR3V09202
VR553	V06 200B	5NR3V09201
VR554	V06 2K	5NR3V09202
VR555	V06 2K	5NR3V09202
VR556	V06 200B	5NR3V09201
VF720	HO6 200KB	5NR3H09204
VR721	HO6 200KB	5NR3H09204
VR722	HO6 10KB	5NR3H09103
VR723	HO6 200KB	5NR3H09204
VR724	HO6 500B	5NR3H09501
VR725	HO6 1 OKB	5NR3H09103

MISCELLANEOUS DESIGNATION	DESCRIPTION	PART NO.
F801	250V3.15A	5NS3224002
SC01	CPT SOCKET (13")	4CT41SS203
SC01	CPT SOCKET (19")	4CT41SS143

WELLS-GARDNER
ELECTRONICS CORPORATION

K7400

STANDARD RES

ISO 9001
certificate № 0104

K 7 4 0 0
PRODUCT SPECIFICATIONS

SPECIFICATIONS
- CRT size (diagonal measure): **25", 27"**
- Phosphor type: P22
- CRT etch: Polished faceplate
- Striped trio spacing: 0.84 mm

INPUT SIGNALS
- Input connector: 0.156 center header
- Video type: RGB analog
- Video input impedance: 1K Ohm; other values available
- Video level: 1.5 to 4 volts peak-to-peak; other levels optional
- Sync type: TTL sync; separate or composite, negative or positive
- Sync input impedance: 4.7 KOhms
- Horizontal sync frequency: 15.75 KHz
- Vertical sync frequency: 47 to 63 Hz

LIGHT OUTPUT
50 fL typical

GEOMETRY
- Horizontal linearity: +/-5%
- Vertical linearity: +/-5%
- Picture size regulation: 2%
- Geometric distortion: +/-2% max

POWER INPUT
- Input voltage: 90 - 264 VAC, 50 - 70 Hz; no isolation transformer required
- Maximum power: 140 Watts

USER CONTROLS
- Remote controls: Brightness, contrast, horizontal size, horizontal centering, vertical size, vertical centering
- Internal controls: Focus

MECHANICAL
See reverse side

MISCELLANEOUS
- Operating temperature: 0 to 55 degrees C
- Agency compliance: U.L., C.S.A., D.H.H.S. radiation performance std., TUV

RESOLUTION
- Graphics modes: 640 X 200 (may be limited by the CRT)
- Video bandwidth: 15 MHz typical

SPECIFICATIONS SUBJECT TO CHANGE WITHOUT NOTICE.

WELLS-GARDNER
ELECTRONICS CORPORATION

K 7 4 0 0
MECHANICAL SPECIFICATIONS

ISO 9001 REGISTERED QUALITY certificate № 0104

DIMENSIONS SHOWN ARE FOR REFERENCE ONLY. FOR SPECIFICS CONTACT W.G.E.C. ENGINEERING.
2701 North Kildare Avenue Chicago, Illinois 60639 Phone (773) 252-8220 Fax (773) 252-8072

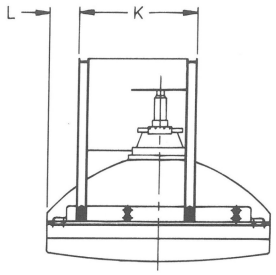

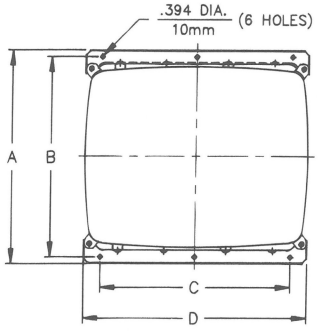

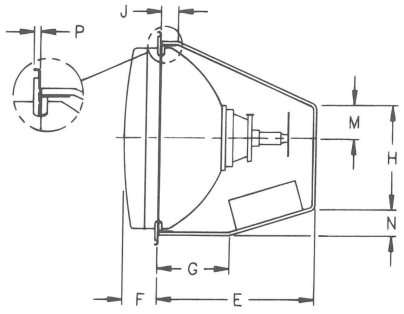

25V Color Monitor 25–U4 *(F25M4)*

WG P/N: WGM2574-U4GS55H

DIM.	A	B	C	D	E	F	G	H	J	K	L	M	N	P
IN.	20.630	19.291	19.291	23.000	16.125	3.590	7.375	10.125	1.750	12.000	3.140	3.250	2.562	.343
mm.	524.0	490.0	490.0	584.2	409.58	91.19	187.33	257.18	44.45	304.8	79.76	82.55	65.07	8.71

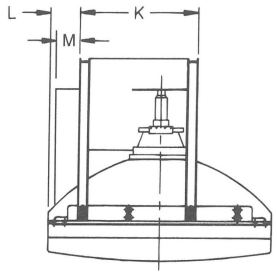

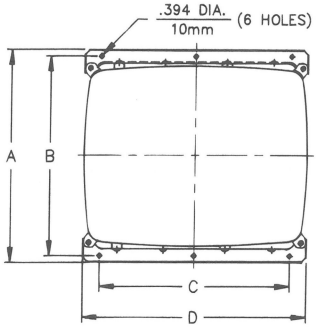

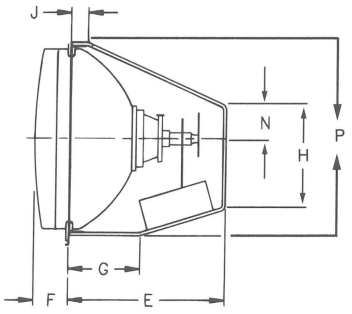

27V Color Monitor 27–U0 *(F27M)*

WG P/N: WGM2774-U0GS08G

DIM.	A	B	C	D	E	F	G	H	J	K	L	M	N	P
IN.	21.937	20.644	20.664	24.500	16.125	3.230	7.375	10.125	1.750	12.000	3.875	2.750	3.250	20.210
mm.	557.20	524.36	524.36	622.30	409.58	82.04	187.33	257.18	44.45	304.80	98.43	69.85	82.55	513.34

WELLS-GARDNER
ELECTRONICS CORPORATION

MODEL
25K7401
27K7401

ISO 9001 REGISTERED QUALITY certificate № 0104

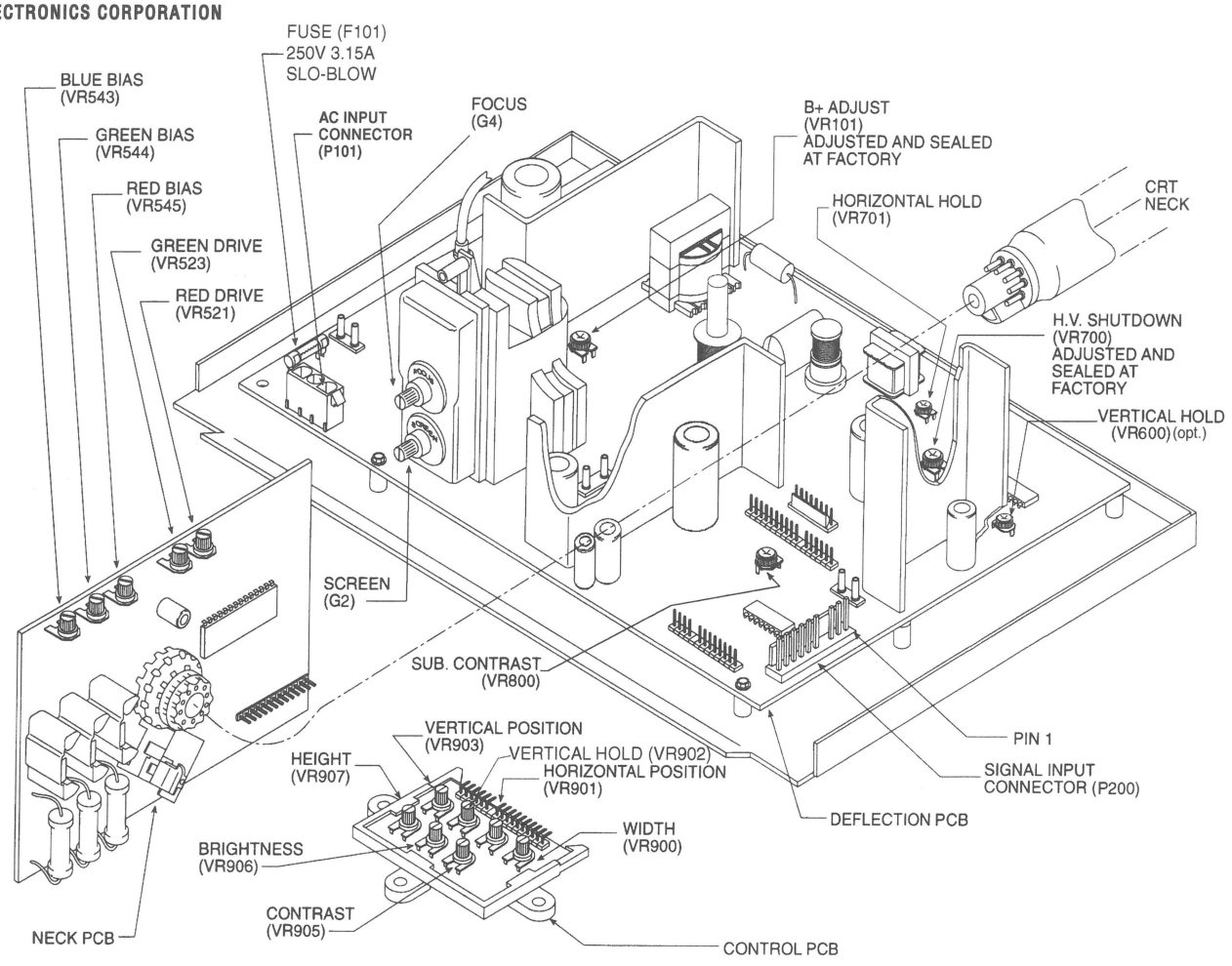

AC INPUT CONNECTOR: P101

AMP 350760-4
Mating AMP type 1-480700-0

Pin	Description
1	AC hot
2	Earth ground
3	AC neutral

INPUT SIGNAL CONNECTOR: P200

AMP 1-640445-0
Mating AMP type 1-640250-0

PCB Connector Pin	Description	Mating Connector Pin
10	Red	1
9	Green	2
8	Blue	3
7	Gnd	4
6	± Vertical Sync	5
5	± Horz/Comp Sync	6
4	Key	7
3	Gnd	8
2	± Vertical Sync	9
1	± Horz/Comp Sync	10

WELLS-GARDNER
ELECTRONICS CORPORATION

25K7401
27K7401

ISO 9001
certificate № 0104

REPLACEMENT PARTS LIST

Main, Neck & Control PCB Assembly Parts List

DIODES

DESIGNATION	DESCRIPTION	PART NO.
Z500	ZENER DIODE 12V 5% 1.0W	066X0040-050
Z601	ZENER DIODE 12V 5% 0.5W	066X0040-046
Z700	ZENER DIODE 5.1V 5% 0.5W	066X0040-028
Z701	ZENER DIODE 5.6V 5% 0.5W	066X0040-022
Z702	ZENER DIODE 13V 6.5% 1.0W	066X0040-017
Z804	ZENER DIODE 9.1V 5% 0.5W	066X0040-020
Z802	ZENER DIODE 24V 3% 0.5W	066X0040-031
Z800	ZENER DIODE 75V 5% 0.5W	066X0040-048
D101, D102, D103, D104	DIODE 1N5406	066X0135-001
D105	DIODE 1N4007	066X0095-001
D106A, D106B, D106C	DIODE 200V 3.5V BYV28-200	066X0097-001
D107	DIODE MUR490	066X0126-002
D108, D112, D113, D310, D301, D302, D303	DIODE RU-2 1A 600V FAST REC	066X0090-001
D114, D603	DIODE 1N4001	066X0071-001
D117	DIODE DAMP 1A 600V GI RGP10J	066X0144-001
D501, D502, D503, D507	DIODE 1N914B	066X0070-001
D504, D505, D506, D803, D807	DIODE SANYO GMA02	066X0062-001
D600, D601, D602, D604, D700	DIODE 1N914B	066X0070-001
D702, D709, D711, D800, D804	DIODE 1N914B	066X0070-001
D707	DIODE DD54RC SANYO	066X0150-001
D708	DIODE MUR 460	066X0126-005
D810	DIODE 1N4005	066X0075-001

INTEGRATED CIRCUITS

DESIGNATION	DESCRIPTION	PART NO.
U101	IC PWM UC3842AN	086X0257-001
U500	IC LM1203N RGB VID AMP	086X0270-001
U601	IC VERT DEFL TDA1771	086X0326-001
U701	IC LA7850 H/V PROC SANYO	086X0274-001
U702	IC QUAD 2-INPUT X OR 2N74LS136	086X0333-001

TRANSFORMERS

DESIGNATION	DESCRIPTION	PART NO.
T101	TFMR SMPS	053X0649-001
T700	TFMR FLBK	053X0651-001
L701	COIL LINEARITY	009A2813-018
L703	COIL PINCUSHION CORRECTION	009A2970-002

TRANSISTORS

DESIGNATION	DESCRIPTION	PART NO.
Q502, Q506, Q507, Q508, Q601, Q700	TRSTR 2N3904 MOT	086X0113-501
Q509, Q510, Q511	TRSTR 2N3906 MOT	086X0114-501
Q800, Q802, Q803	TRSTR MPSA92 MOT	086X0133-501
Q602	TRSTR 2SC2275 NEC	086X0176-001
Q703	TRSTR 2SC2482 TOSH	086X0185-501
Q709	TRSTR 2N4403	086X0211-501
Q704	TRSTR 2SC3686	086X0286-001
Q503, Q504, Q505	TRSTR NPN SANYO 2SC3782	086X0287-001
Q101	TRSTR N-MOSFET 6N60	086X0334-001
Q710	TRSTR BDX53A SGS NPN DAR	086X0335-001

VARIABLE POTENTIOMETERS

DESIGNATION	DESCRIPTION	PART NO.
VR900	TRIM POT 5K OHM .15W	040X0714-007
VR901	TRIM POT 20K OHM .15W	040X0714-009
VR903	TRIM POT 2K OHM .15W	040X0714-006
VR905	TRIM POT 10K OHM .15W	040X0714-008
VR906	TRIM POT 50K OHM .15W	040X0714-010
VR907	TRIM POT 200K OHM .15W	040X0714-012

MISCELLANEOUS

DESIGNATION	DESCRIPTION	PART NO.
F101	FUSE 3.15A 5 X 20 IEC/UL SLO BLOW	016X0211-009
R760	RES 470 OHM 5% 1W FP FAILSFE	043X0509-006
CRT	CRT 25 INCH	088X0373-506
CRT	CRT 27 INCH	088X0375-506
R108	RES 0.33 OHM 5% 2W MF	420X5339-323

WELLS-GARDNER
ELECTRONICS CORPORATION

K7500

MID RESOLUTION

ISO 9001
certificate № 0104

K 7 5 0 0
PRODUCT SPECIFICATIONS

SPECIFICATIONS
- CRT size (diagonal measure): **25", 27"**
- Phosphor type: P22
- CRT etch: Polished faceplate; other faceplates available
- Striped trio spacing: 0.84 mm (25" and 27")

INPUT SIGNALS
- Input connector: 0.156 center header
- Video type: RGB analog
- Video input impedance: 1k ohm; other values available
- Video level: 1.5 to 4 volts peak-to-peak; other levels optional
- Sync type: TTL sync; separate or composite, negative or positive
- Sync input impedance: 4.7k ohms
- Horizontal sync frequency: 25 kHz
- Vertical sync frequency: 47 to 63 Hz

LIGHT OUTPUT
40 fL typical

GEOMETRY
- Horizontal linearity: ± 5%
- Vertical linearity: ± 5%
- Picture size regulation: 2%
- Geometric distortion: ± 2% max

POWER INPUT
- Input voltage: 90 - 264 VAC, 50 - 70 Hz; no isolation transformer required
- Maximum power: 130 watts

USER CONTROLS
- Remote controls: Brightness, contrast, horizontal size, horizontal centering, vertical size, vertical centering, vertical frequency
- Internal controls: Focus, horizontal frequency

MECHANICAL
See additional pages

MISCELLANEOUS
- Operating temperature: 0 to 55 degrees C
- Agency compliance: U.L., C.S.A., D.H.H.S. radiation performance std., TUV

RESOLUTION
- Graphics modes: 640 X 400 (may be limited by the CRT)
- Video bandwidth: 15 MHz typical

SPECIFICATIONS SUBJECT TO CHANGE WITHOUT NOTICE.

WELLS-GARDNER
ELECTRONICS CORPORATION

K 7 5 0 0
MECHANICAL SPECIFICATIONS

ISO 9001 REGISTERED QUALITY certificate № 0104

DIMENSIONS SHOWN ARE FOR REFERENCE ONLY. FOR SPECIFICS CONTACT W.G.E.C. ENGINEERING.
2701 North Kildare Avenue Chicago, Illinois 60639 Phone (773) 252-8220 Fax (773) 252-8072

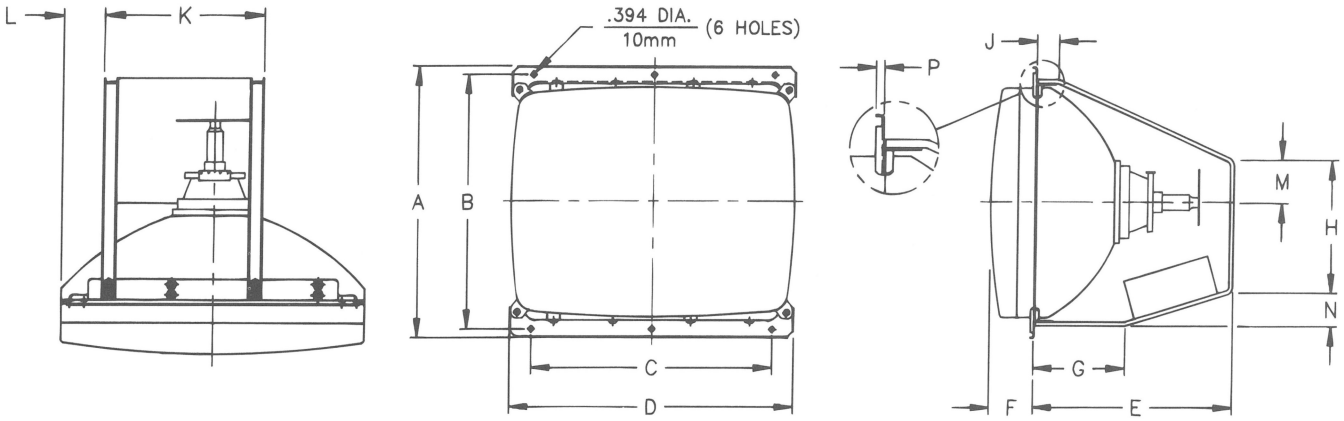

25V Color Monitor 25–U4 *(F25M4)* WG P/N: WGM2575-U4GS27S

DIM.	A	B	C	D	E	F	G	H	J	K	L	M	N	P
IN.	20.630	19.291	19.291	23.000	16.125	3.590	7.375	10.125	1.750	12.000	3.140	3.250	2.562	.343
mm.	524.0	490.0	490.0	584.2	409.58	91.19	187.33	257.18	44.45	304.8	79.76	82.55	65.07	8.71

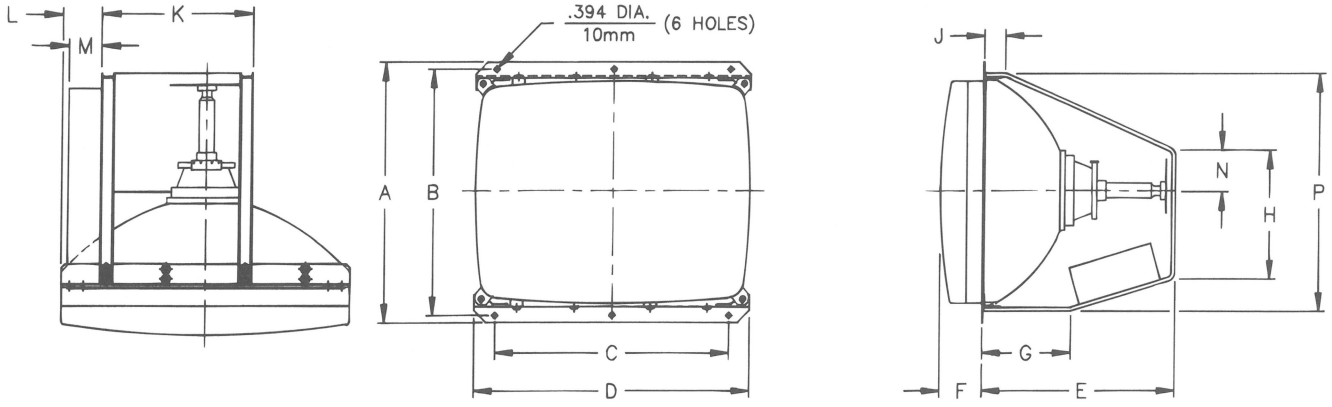

27V Color Monitor 27–U0 *(F27M)* WG P/N: WGM2775-U0GS61H

DIM.	A	B	C	D	E	F	G	H	J	K	L	M	N	P
IN.	21.937	20.644	20.644	24.500	16.125	3.230	7.375	10.125	1.750	12.000	3.875	2.750	3.250	20.210
mm.	557.20	524.36	524.36	622.30	409.58	82.04	187.33	257.18	44.45	304.80	98.43	69.85	82.55	513.34

WELLS-GARDNER
ELECTRONICS CORPORATION

MODEL
25K7501
27K7501

ISO 9001
certificate № 0104

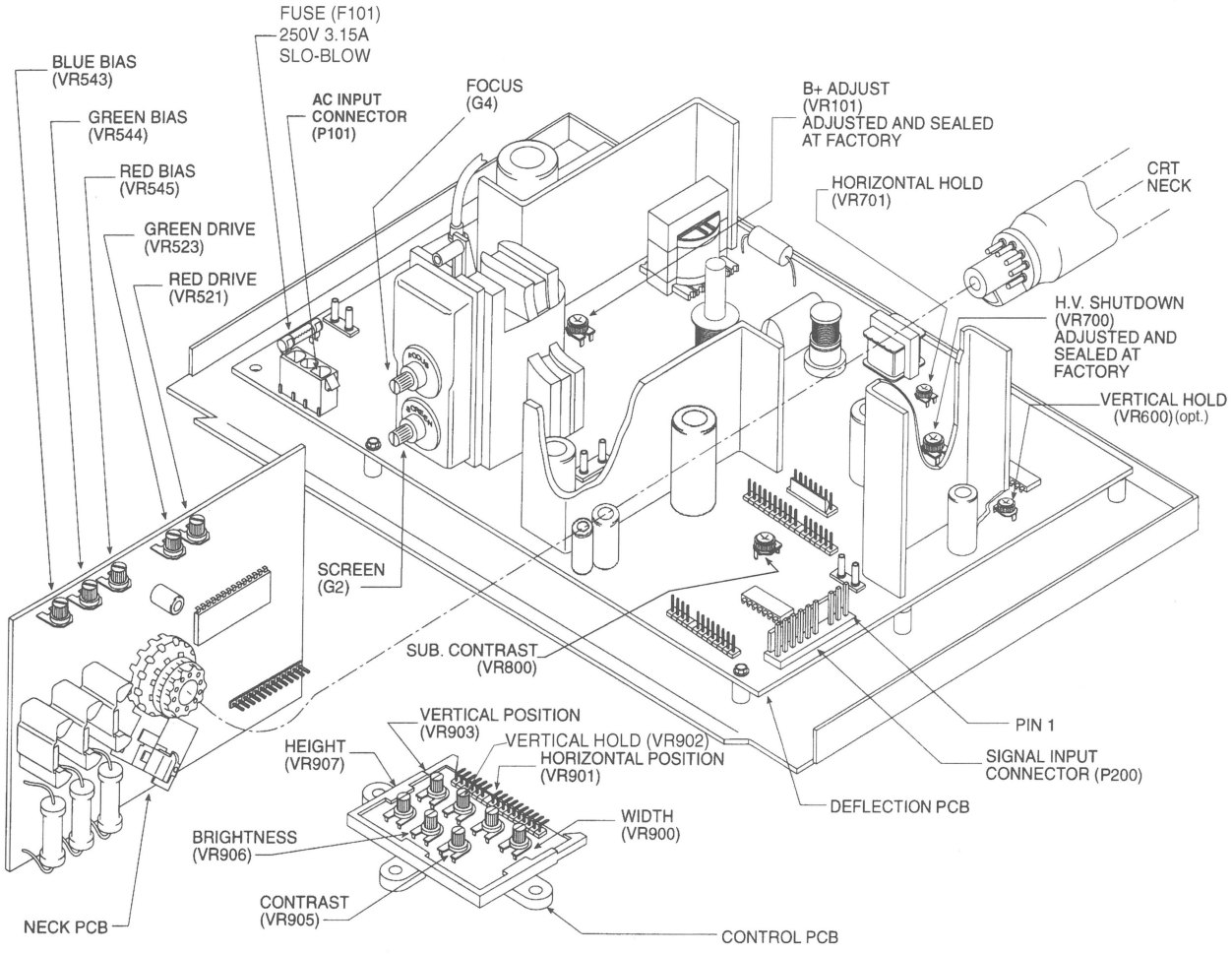

AC INPUT CONNECTOR: P101

AMP 350760-4
Mating AMP type 1-480700-0

Pin	Description
1	AC hot
2	Earth ground
3	AC neutral

INPUT SIGNAL CONNECTOR: P200

AMP 1-640445-0
Mating AMP type 1-640250-0

PCB Connector Pin	Description	Mating Connector Pin
10	Red	1
9	Green	2
8	Blue	3
7	Gnd	4
6	± Vertical Sync	5
5	± Horz/Comp Sync	6
4	Key	7
3	Gnd	8
2	± Vertical Sync	9
1	± Horz/Comp Sync	10

WELLS-GARDNER
ELECTRONICS CORPORATION

25K7501
27K7501

ISO 9001 REGISTERED QUALITY
certificate № 0104

REPLACEMENT PARTS LIST

Main, Neck & Control PCB Assembly Parts List

DIODES

DESIGNATION	DESCRIPTION	PART NO.
Z500	ZENER DIODE 12V 5% 1.0W	066X0040-050
Z601	ZENER DIODE 12V 5% 0.5W	066X0040-046
Z700	ZENER DIODE 5.1V 5% 0.5W	066X0040-028
Z701	ZENER DIODE 5.6V 5% 0.5W	066X0040-022
Z702	ZENER DIODE 13V 6.5% 1.0W	066X0040-017
Z804	ZENER DIODE 9.1V 5% 0.5W	066X0040-020
Z802	ZENER DIODE 24V 3% 0.5W	066X0040-031
Z800	ZENER DIODE 75V 5% 0.5W	066X0040-048
D101, D102, D103, D104	DIODE 1N5406	066X0135-001
D105	DIODE 1N4007	066X0095-001
D106A, D106B, D106C	DIODE 200V 3.5V BYV28-200	066X0097-001
D107	DIODE MUR490	066X0126-002
D108, D112, D113, D310, D301, D302, D303	DIODE RU-2 1A 600V FAST REC	066X0090-001
D114, D603	DIODE 1N4001	066X0071-001
D117	DIODE DAMP 1A 600V GI RGP10J	066X0144-001
D501, D502, D503, D507	DIODE 1N914B	066X0070-001
D504, D505, D506, D803, D807	DIODE SANYO GMA02	066X0062-001
D600, D601, D602, D604, D700	DIODE 1N914B	066X0070-001
D702, D709, D711, D800, D804	DIODE 1N914B	066X0070-001
D707	DIODE DD54RC SANYO	066X0150-001
D708	DIODE MUR 460	066X0126-005
D810	DIODE 1N4005	066X0075-001

INTEGRATED CIRCUITS

DESIGNATION	DESCRIPTION	PART NO.
U101	IC PWM UC3842AN	086X0257-001
U500	IC LM1203N RGB VID AMP	086X0270-001
U601	IC VERT DEFL TDA1771	086X0326-001
U701	IC LA7850 H/V PROC SANYO	086X0274-001
U702	IC QUAD 2-INPUT X OR 2N74LS136	086X0333-001

TRANSFORMERS

DESIGNATION	DESCRIPTION	PART NO.
T101	TFMR SMPS	053X0649-001
T700	TFMR FLBK	053X0651-001
L701	COIL LINEARITY	009A2813-018
L703	COIL PINCUSHION CORRECTION	009A2970-002

TRANSISTORS

DESIGNATION	DESCRIPTION	PART NO.
Q502, Q506, Q507, Q508, Q601, Q700	TRSTR 2N3904 MOT	086X0113-501
Q509, Q510, Q511	TRSTR 2N3906 MOT	086X0114-501
Q800, Q802, Q803	TRSTR MPSA92 MOT	086X0133-501
Q602	TRSTR 2SC2275 NEC	086X0176-001
Q703	TRSTR 2SC2482 TOSH	086X0185-501
Q709	TRSTR 2N4403	086X0211-501
Q704	TRSTR 2SC3686	086X0286-001
Q503, Q504, Q505	TRSTR NPN SANYO 2SC3782	086X0287-001
Q101	TRSTR N-MOSFET 6N60	086X0334-001
Q710	TRSTR BDX53A SGS NPN DAR	086X0335-001

VARIABLE POTENTIOMETERS

DESIGNATION	DESCRIPTION	PART NO.
VR900	TRIM POT 5K OHM .15W	040X0714-007
VR901	TRIM POT 20K OHM .15W	040X0714-009
VR903	TRIM POT 2K OHM .15W	040X0714-006
VR905	TRIM POT 10K OHM .15W	040X0714-008
VR906	TRIM POT 50K OHM .15W	040X0714-010
VR907	TRIM POT 200K OHM .15W	040X0714-012

MISCELLANEOUS

DESIGNATION	DESCRIPTION	PART NO.
F101	FUSE 3.15A 5 X 20 IEC/UL SLO BLOW	016X0211-009
R760	RES 470 OHM 5% 1W FP FAILSFE	043X0509-006
CRT	CRT 25 INCH	088X0373-506
CRT	CRT 27 INCH	088X0375-506
R108	RES 0.33 OHM 5% 2W MF	420X5339-323

WELLS-GARDNER
ELECTRONICS CORPORATION

K7600

STANDARD RES / MID RES

ISO 9001
certificate № 0104

K 7 6 0 0
PRODUCT SPECIFICATIONS

SPECIFICATIONS
- CRT size (diagonal measure): 39"
- Phosphor type: P22
- CRT etch: Polished faceplate; other faceplates available
- Striped trio spacing: 1.00mm (39")

INPUT SIGNALS
- Input connector: 0.156 center header
- Video type: RGB analog
- Video input impedance: 1k ohm; other values available
- Video level: 1.5 to 4 volts peak-to-peak; other levels optional
- Sync type: TTL sync; separate or composite, negative or positive
- Sync input impedance: 4.7k ohm
- Horizontal sync frequency: 15.75 kHz or 25 kHz
- Vertical sync frequency: 47 to 63 Hz

LIGHT OUTPUT
33 fL typical

GEOMETRY
- Horizontal linearity: ± 7%
- Vertical linearity: ± 5%
- Picture size regulation: 1%
- Geometric distortion: ± 2% max

POWER INPUT
- Input voltage: 90 - 264 VAC, 50 - 70 Hz; no isolation transformer required
- Maximum power: 150 Watts

USER CONTROLS
- Remote controls: Brightness, contrast, horizontal size, horizontal centering, vertical size, vertical centering
- Internal controls: Focus, horizontal frequency, vertical frequency

MECHANICAL
See additional pages

MISCELLANEOUS
- Operating temperature: 0 to 55 degrees C
- Agency compliance: U.L., C.S.A., D.H.H.S. radiation performance std., TUV

RESOLUTION
- Graphics modes: Standard Res - 640 X 200 (may be limited by the CRT)
  Mid Res - 640 X 400 (may be limited by the CRT)
- Video bandwidth: 15 MHz typical

SPECIFICATIONS SUBJECT TO CHANGE WITHOUT NOTICE.

WELLS-GARDNER
ELECTRONICS CORPORATION

K 7 6 0 0
MECHANICAL SPECIFICATIONS

ISO 9001 REGISTERED QUALITY certificate № 0104

DIMENSIONS SHOWN ARE FOR REFERENCE ONLY. FOR SPECIFICS CONTACT W.G.E.C. ENGINEERING.
2701 North Kildare Avenue Chicago, Illinois 60639 Phone (773) 252-8220 Fax (773) 252-8072

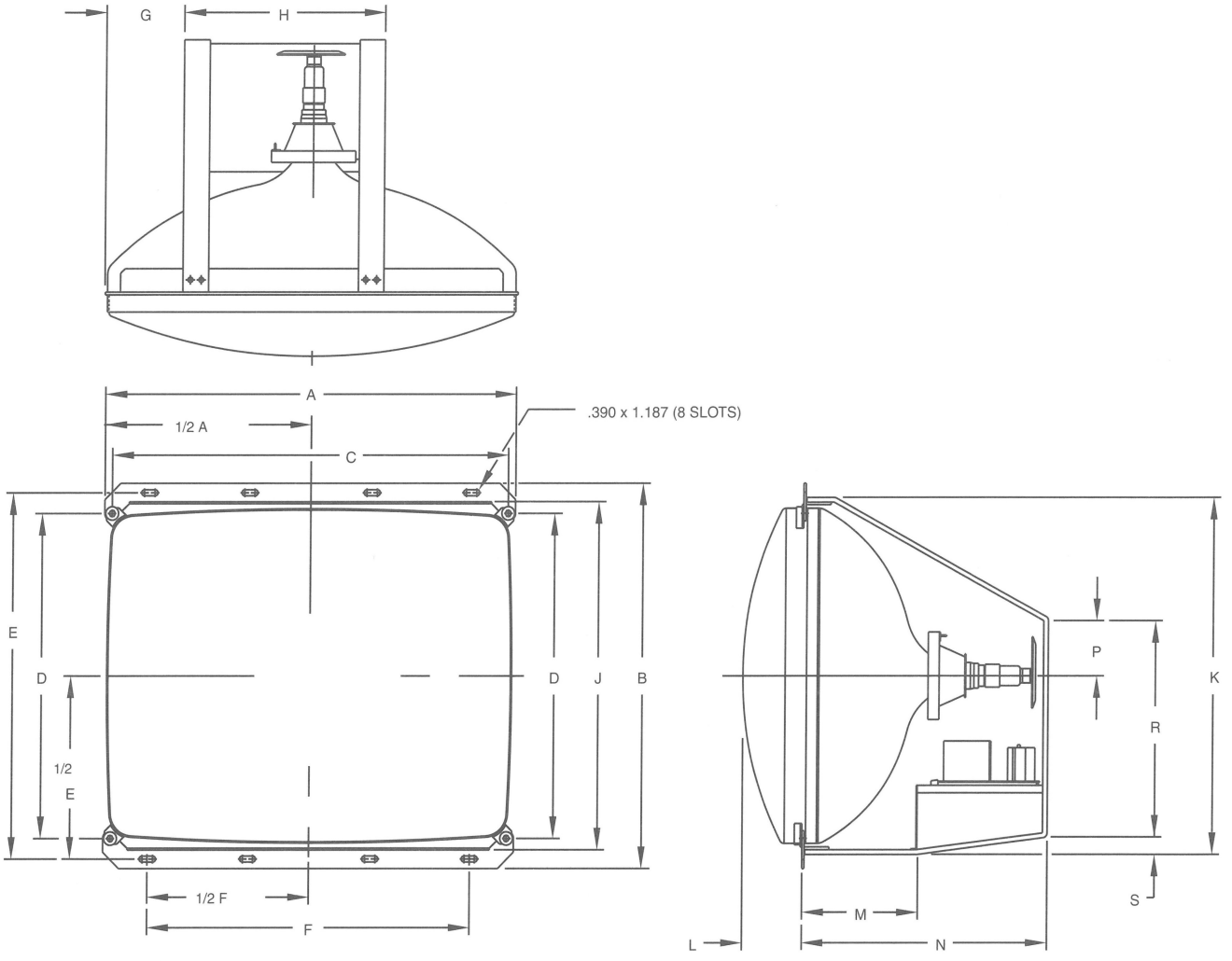

39V Color Monitor (15/25 kHz) 39–U0

WG P/N: WGM3976-U0TS25J

DIM.	A	B	C	D	E	F	G	H	J	K	L	M	N	P	R	S
IN.	31.844	28.125	30.796	23.875	26.937	24.594	8.000	12.500	25.437	25.812	5.062	8.187	17.937	5.000	17.000	.500
mm.	808.84	714.38	782.22	606.43	684.20	624.69	203.20	317.50	646.10	655.63	128.58	207.95	455.60	127.00	431.80	12.70

WELLS-GARDNER
ELECTRONICS CORPORATION

U3000

STANDARD RES/MID RES

ISO 9001
REGISTERED
QUALITY
certificate № 0104

LARGE SCREEN U3000
M3330 AND M3331
PRODUCT SPECIFICATIONS

SPECIFICATIONS
- CRT size (diagonal measure): **33"**
- Phosphor type: P22
- CRT etch: Polished faceplate; other faceplates available
- Striped trio spacing: .89mm (33")

INPUT SIGNALS
- Input connector: 0.156 center header
- Video type: RGB analog
- Video input impedance: 1k ohm; other values available
- Video level: 1.5 to 4 volts peak-to-peak; other levels optional
- Sync type: TTL sync; separate or composite, negative or positive
- Sync input impedance: 4.7k ohms
- Horizontal sync frequency: 15.75 kHz (M3330) or 25 kHz (M3331)
- Vertical sync frequency: 47 to 63 Hz

LIGHT OUTPUT
40 fL typical

GEOMETRY
- Horizontal linearity: ± 5%
- Vertical linearity: ± 5%
- Picture size regulation: 1%
- Geometric distortion: ± 2% max

POWER INPUT
- Input voltage: 90 - 264 VAC, 50 - 70 Hz; no isolation transformer required
- Maximum power: 160 watts

USER CONTROLS
- Remote controls: Brightness, contract, horizontal size, horizontal centering, horizontal frequency, vertical size, vertical centering, vertical frequency
- Internal controls: Focus

MECHANICAL
See additional pages

MISCELLANEOUS
- Operating temperature: 0 to 55 degrees C
- Agency compliance: U.L., C.S.A., D.H.H.S. radiation performance std., TUV

RESOLUTION
- Graphics modes: Standard Res - 640 X 200 (M3330)
  Mid Res - 640 X 400 (M3331)
- Video bandwidth: 25 MHz typical

SPECIFICATIONS SUBJECT TO CHANGE WITHOUT NOTICE.

WELLS-GARDNER
ELECTRONICS CORPORATION

U 3 0 0 0 0
MECHANICAL SPECIFICATIONS

ISO 9001 REGISTERED QUALITY certificate № 0104

DIMENSIONS SHOWN ARE FOR REFERENCE ONLY. FOR SPECIFICS CONTACT W.G.E.C. ENGINEERING.
2701 North Kildare Avenue Chicago, Illinois 60639 Phone (773) 252-8220 Fax (773) 252-8072

WG P/N: WGM3330-U0GS52F (15.75KHZ MONITOR)
WGM3331-U0TS59G (25.0KHZ MONITOR)

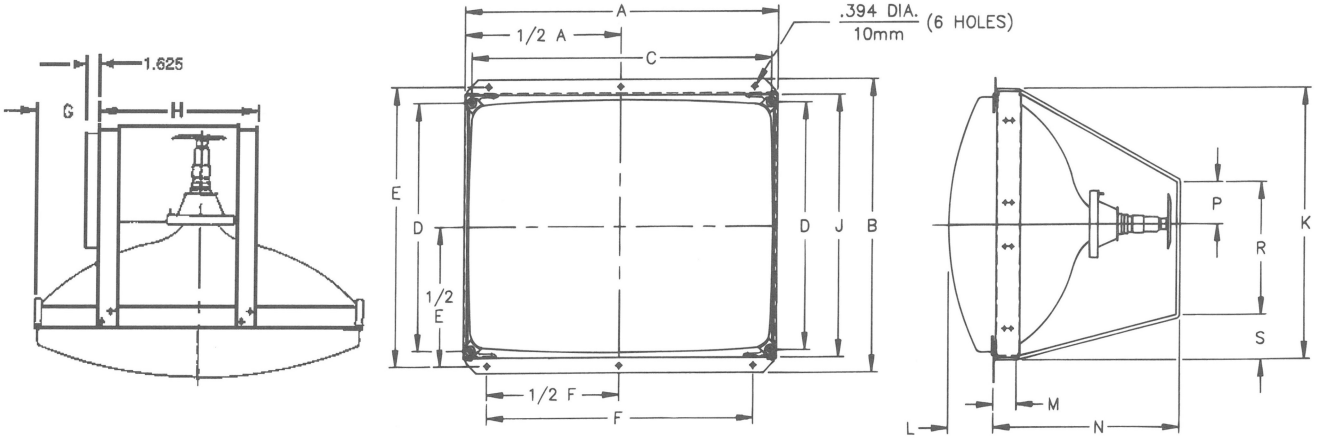

33V Color Monitor 33–U0 *(F33M)*

DIM.	A	B	C	D	E	F	G	H	J	K	L	M	N	P	R	S
IN.	28.274	25.281	27.104	21.344	24.031	24.031	5.268	13.736	22.601	23.406	4.108	2.075	16.700	3.625	11.437	3.880
mm.	718.16	642.14	688.44	542.14	610.39	610.39	133.81	348.89	574.07	594.51	104.34	52.781	424.18	92.075	290.50	98.552

WELLS-GARDNER
ELECTRONICS CORPORATION

M O D E L
3 3 K 3 0 0 1

ISO 9001 REGISTERED QUALITY certificate № 0104

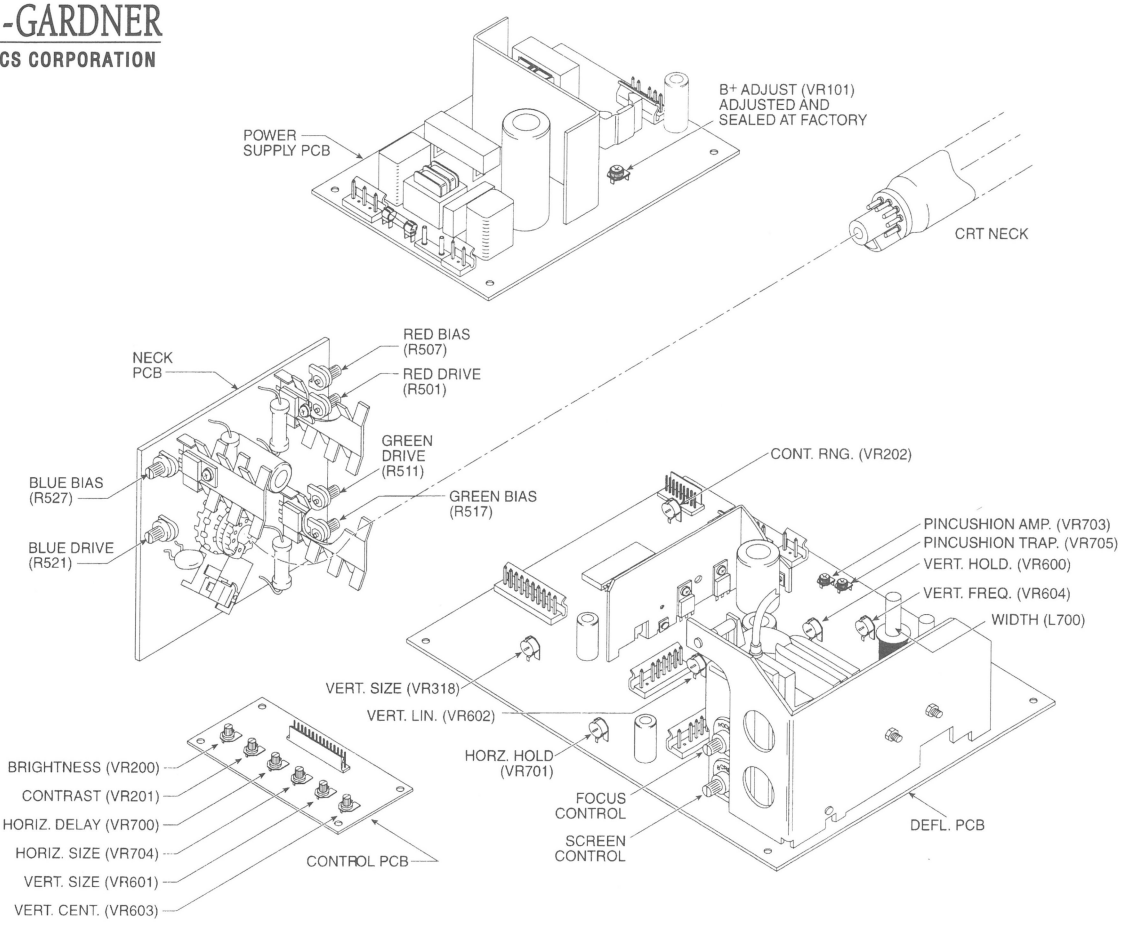

AC INPUT CONNECTOR: CN101

PCB Connector
Amp type 640445-5
Mating Amp type 640251-5

Pin	Description
1	AC hot
2	N/A
3	AC neutral
4	N/A
5	Ground

INPUT SIGNAL CONNECTOR: P301

PCB Connector
Amp type 1-640445-0
Mating Amp type 1-640251-0

Pin	Description
1	Horizontal sync
2	Vertical sync
3	Sync ground
4	Shield ground
5	Blue return
6	Green return
7	Red return
8	Blue video
9	Green video
10	Red video

Optional Cable Connector
Amp type 748364-1 (DB15)
Mating Amp type 748565-1

Pin	Description
1	Red video
2	Green video
3	Blue video
4	N/A
5	N/A
6	Red return
7	Green return
8	Blue return
9	N/A
10	Mode select
11	Sync return
12	N/A
13	Horizontal sync
14	Vertical sync
15	Shield ground

WELLS-GARDNER
ELECTRONICS CORPORATION

33K3001

ISO 9001 REGISTERED QUALITY
certificate № 0104

REPLACEMENT PARTS LIST

Main, Neck & Control PCB Assembly Parts List

DIODES

DESIGNATION	DESCRIPTION	PART NO.
D101, D102, D103, D104	DIODE IN5406	066X0135-001
D106, D118	DIODE BYV28-200	066X0097-001
D107, D705	DIODE MUR490	066X0126-002
D602	DIODE IN4001	066X0071-001
D603	DIODE RL202	066X0147-001
D704	DIODE DD54RC	066X0150-001

INTEGRATED CIRCUITS

DESIGNATION	DESCRIPTION	PART NO.
U101	IC PWM UC3842AN	086X0257-001
U200	IC LM1203 VIDEO	086X0270-001
U300	IC 74LS156 DEMULT.	086X0295-001
U302	IC 74LS86 EXL-OR	086X0313-001
U303	IC 74LS123 DUAL-MONO	086X0338-001
U600	IC TDA1175 VERT.	086X0347-001
U700	IC LA7850 HORZ.	086X0274-001

TRANSFORMERS

DESIGNATION	DESCRIPTION	PART NO.
T101	TFMR SMPS	052X0148-001
T701	TFMR FLBK	053X0639-001
L701	COIL LINEARITY	009A2813-019
L702	COIL WIDTH	009A2838-003

TRANSISTORS

DESIGNATION	DESCRIPTION	PART NO.
Q101	TRSTR N-MOSFET 6N60	086X0334-001
Q500, Q502, Q504	TRSTR 2SC3950	086X0290-001
Q501, Q503, Q505	TRSTR NPN SANYO 2SC3782	086X0287-001
Q601	TRSTR 2SC525R	086X0074-001
Q602	TRSTR 2SB595R	086X0075-001
Q701	TRSTR 2SC3688	086X0321-001

VARIABLE POTENTIOMETERS

DESIGNATION	DESCRIPTION	PART NO.
VR200, VR201	TRIM POT 1K OHM .5W	040X0703-001
VR700	TRIM POT 20K OHM .5W	040X0703-006
VR704	TRIM POT 5K OHM .5W	040X0703-004
VR601	TRIM POT 100K OHM .5W	040X0703-007
VR603	TRIM POT 2K OHM .5W	040X0703-002

MISCELLANEOUS

DESIGNATION	DESCRIPTION	PART NO.
F101	FUSE 3.15A 5 X 20 IEC/UL SLO-BLO	016X0211-009
CRT	CRT 33 INCH, PHILIPS	088X0353-001

WELLS-GARDNER
ELECTRONICS CORPORATION

U3000

STANDARD RESOLUTION

ISO 9001
certificate № 0104

LARGE SCREEN U3000
M3930
PRODUCT SPECIFICATIONS

SPECIFICATIONS
- CRT size (diagonal measure): 39"
- Phosphor type: P22
- CRT etch: Polished faceplate; other faceplates available
- Striped trio spacing: 1.00 mm (39")

INPUT SIGNALS
- Input connector: 0.156 center header
- Video type: RGB analog
- Video input impedance: 1k ohm; other values available
- Video level: 1.5 to 4 volts peak-to-peak; other levels optional
- Sync type: TTL sync; separate or composite, negative or positive
- Sync input impedance: 4.7k ohm
- Horizontal sync frequency: 15.75 kHz
- Vertical sync frequency: 47 to 63 Hz

LIGHT OUTPUT
40 fL typical

GEOMETRY
- Horizontal linearity: ± 5%
- Vertical linearity: ± 5%
- Picture size regulation: 1%
- Geometric distortion: ± 2% max

POWER INPUT
- Input voltage: 90 - 264 VAC, 50 - 70 Hz; no isolation transformer required
- Maximum power: 160 watts

USER CONTROLS
- Remote controls: Brightness, contrast, horizontal size, horizontal centering, vertical size, vertical centering
- Internal controls: Focus, horizontal frequency, vertical frequency

MECHANICAL
See additional pages

MISCELLANEOUS
- Operating temperature: 0 to 55 degrees C
- Agency compliance: U.L., C.S.A., D.H.H.S. radiation performance std., TUV

RESOLUTION
- Graphics modes: Standard Res - 640 X 200 (M3330)
- Video bandwidth: 25 MHz typical

SPECIFICATIONS SUBJECT TO CHANGE WITHOUT NOTICE.

WELLS-GARDNER
ELECTRONICS CORPORATION

U 3 0 0 0 0
MECHANICAL SPECIFICATIONS

ISO 9001 REGISTERED QUALITY certificate № 0104

DIMENSIONS SHOWN ARE FOR REFERENCE ONLY. FOR SPECIFICS CONTACT W.G.E.C. ENGINEERING.
2701 North Kildare Avenue Chicago, Illinois 60639 Phone (773) 252-8220 Fax (773) 252-8072

WG P/N: WGM3930-U0TS16J

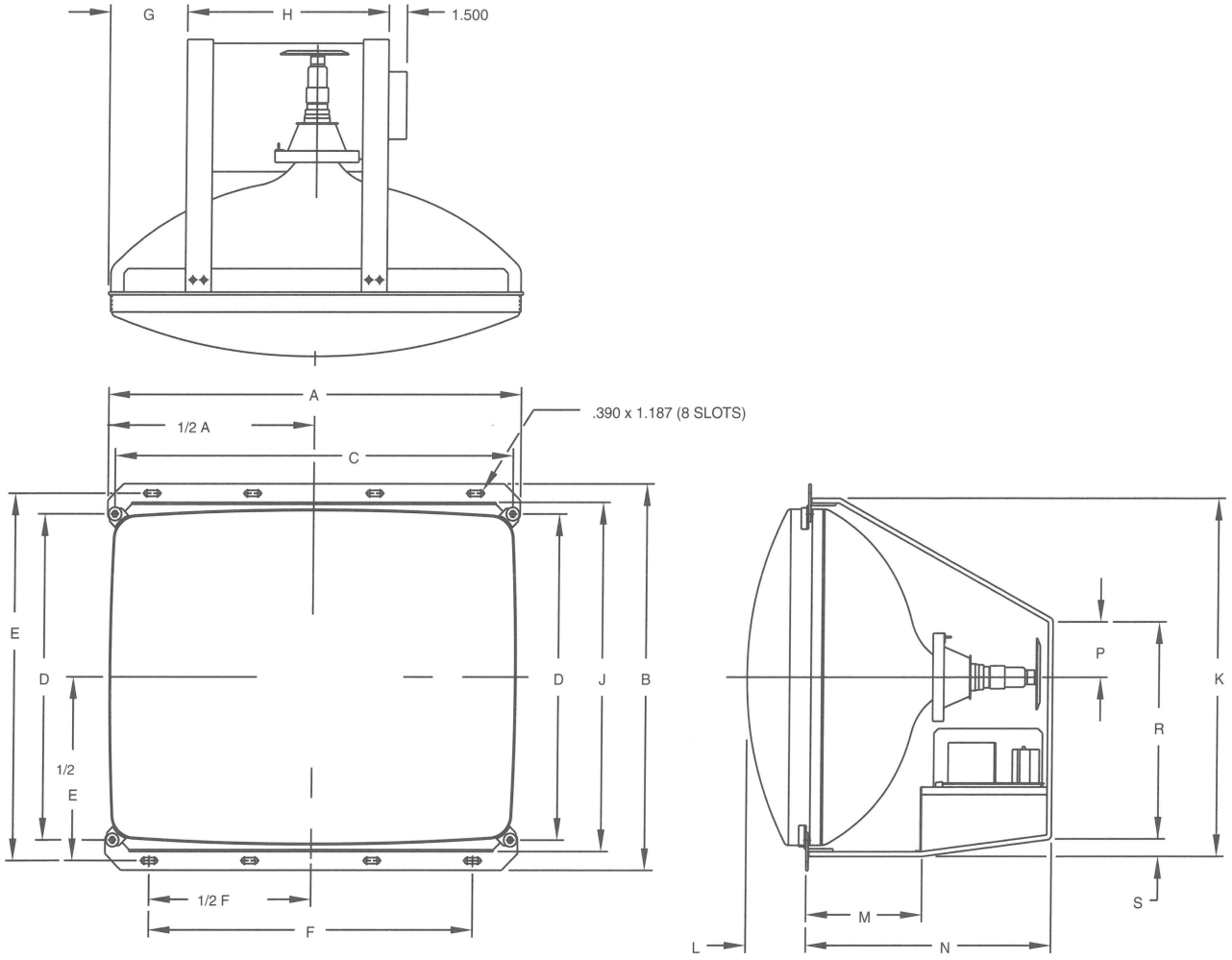

39V Color Monitor (15kHz) 39-U0 *(F33M)*

DIM.	A	B	C	D	E	F	G	H	J	K	L	M	N	P	R	S
IN.	31.844	28.125	30.796	23.875	26.937	24.594	8.000	12.500	25.437	25.812	5.062	8.187	17.937	5.000	17.000	.500
mm.	808.84	714.38	782.22	606.43	684.20	624.69	203.20	317.50	646.10	655.63	128.58	207.95	455.60	127.00	431.80	12.70

WELLS-GARDNER
ELECTRONICS CORPORATION

U3000

VGA/SVGA

U 3 0 0 0
PRODUCT SPECIFICATIONS

SPECIFICATIONS
- CRT size (diagonal measure): **14", 17" FS, 19"**
- Phosphor type: P22
- CRT etch: Polished faceplate; other faceplates available
- Phosphor trio spacing: .28mm or .39mm (14"), .42mm (17"FS), .71mm (19")

INPUT SIGNALS
- Input connector: 15 pin D-sub male; VGA compatible
- Video type: RGB analog
- Video input impedance: 75 Ohm: 470 Ohm optional
- Video level: 0.7 volts peak-to-peak; other levels optional
- Sync type: Standard VGA/SVGA TTL sync; composite optional
- Sync input impedance: 4.7 kOhm
- Horizontal sync frequency: 31.5, 35 kHz
- Vertical sync frequency: 56 to 70 Hz

LIGHT OUTPUT
40 fL typical

GEOMETRY
- Horizontal linearity: +/- 5%
- Vertical linearity: +/- 5%
- Picture size regulation: 1%
- Geometric distortion: +/- 2% max

POWER INPUT
- Input voltage: 90 - 264 VAC, 50 - 70 Hz; no isolation transformer required
- Max power: 130 Watts

USER CONTROLS
- Remote controls: Brightness, contrast, horizontal size, horizontal centering, vertical size, vertical centering
- Internal controls: Horizontal frequency, vertical frequency, vertical linearity, focus

MECHANICALS
See additional pages

MISCELLANEOUS
- Operating temperature: 0 to 55 degrees C
- Agency compliance: U.L., C.S.A., D.H.H.S. radiation performance standard, T.U.V.

RESOLUTION
- Graphics modes: VGA: 640 x 200, 640 x 350, 640 x 480
  SVGA: 800 x 600
- Video bandwidth: 25 MHz typical

SPECIFICATIONS SUBJECT TO CHANGE WITHOUT NOTICE

REGISTERED ISO 9001 QUALITY
certificate № 0104

WELLS-GARDNER
ELECTRONICS CORPORATION

U 3 0 0 0 0
MECHANICAL SPECIFICATIONS

ISO 9001 REGISTERED QUALITY certificate № 0104

DIMENSIONS SHOWN ARE FOR REFERENCE ONLY. FOR SPECIFICS CONTACT W.G.E.C. ENGINEERING.
2701 North Kildare Avenue Chicago, Illinois 60639 Phone (773) 252-8220 Fax (773) 252-8072

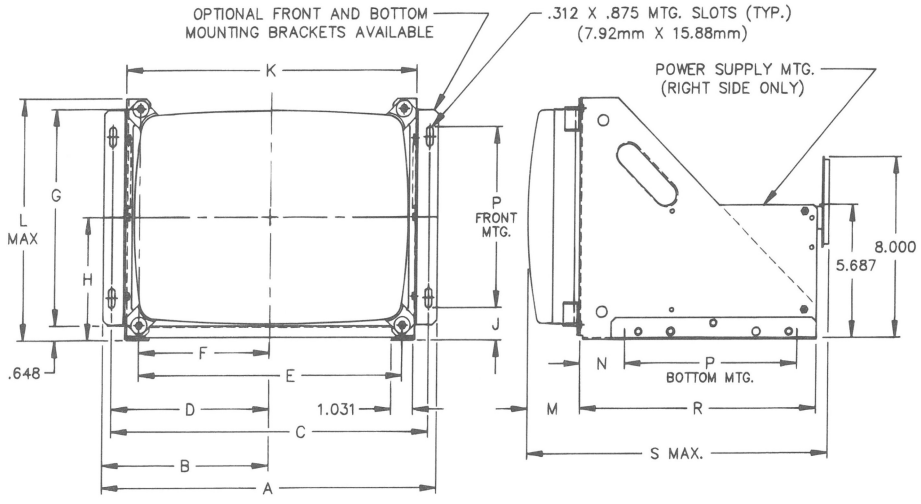

14VGA Monitor 14–M7 *(F13HM7)* WG P/N: WGM1430-M7AS50E

DIM.	A	B	C	D	E	F	G	H	J	K	L	M	N	P	R	S
IN.	15.625	7.812	14.812	7.406	12.260	6.130	9.575	5.437	1.438	13.500	10.750	2.450	2.000	8.000	11.000	14.125
mm.	396.9	198.4	376.2	188.1	311.4	155.7	243.2	138.1	36.52	342.9	273.0	62.23	50.80	203.2	279.4	358.7

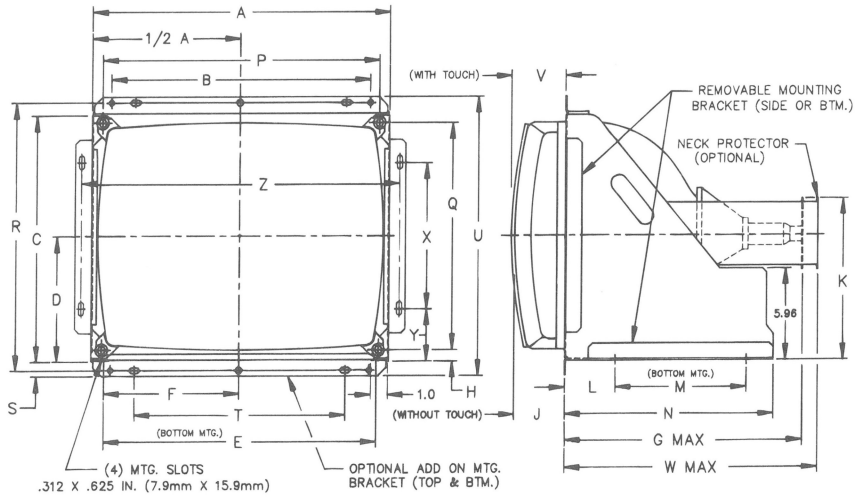

17V Color Monitor 17–M2 *(F17HM2)* WG P/N: WGM1730-M2DS15F

DIM.	A	B	C	D	E	F	G	H	J	K	L	M	N	P	Q	R	S	T	U	V	W	X	Y	Z
IN.	15.375	13.500	12.437	6.312	14.125	7.062	12.875	.562	2.236	9.500	2.957	7.250	11.375	14.450	11.500	13.776	.968	10.625	14.496	2.438	13.375	7.125	2.750	16.620
mm.	390.53	342.90	315.90	160.33	358.78	179.38	327.03	14.27	56.80	241.30	75.11	184.15	288.93	367.03	292.10	349.91	24.59	269.88	368.20	61.93	339.73	180.98	69.85	422.15

WELLS-GARDNER
ELECTRONICS CORPORATION

U 3 0 0 0 0
MECHANICAL SPECIFICATIONS

ISO 9001 REGISTERED QUALITY certificate № 0104

DIMENSIONS SHOWN ARE FOR REFERENCE ONLY. FOR SPECIFICS CONTACT W.G.E.C. ENGINEERING.
2701 North Kildare Avenue Chicago, Illinois 60639 Phone (773) 252-8220 Fax (773) 252-8072

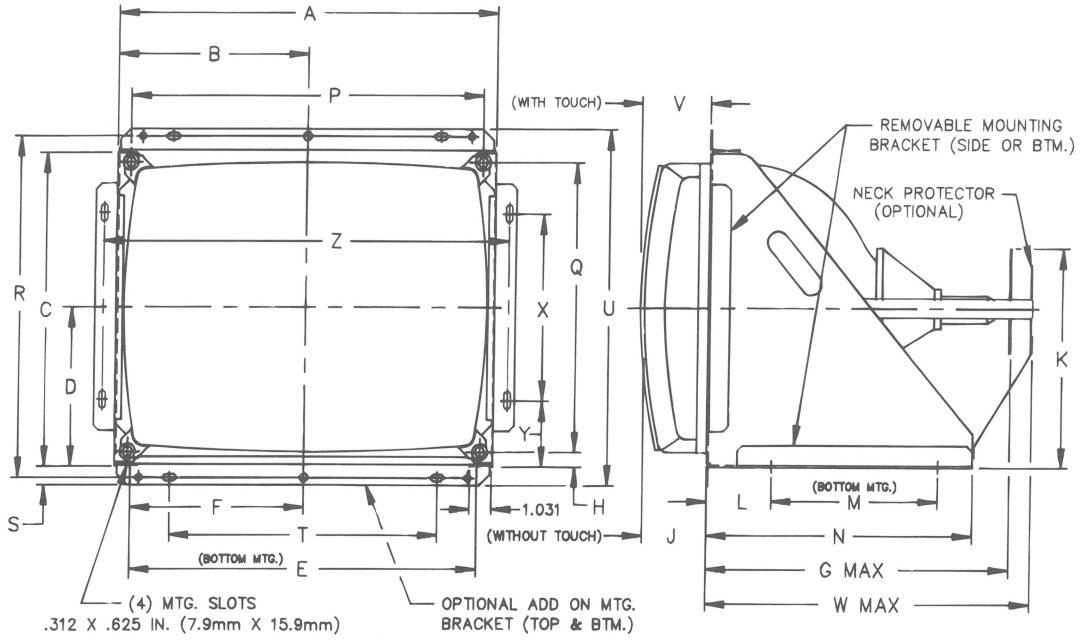

19V Color Monitor 19–M2 ***(F19HM2)*** **WG P/N:** WGM1930-M2TS42E

DIM.	A	B	C	D	E	F	G	H	J	K	L	M	N	P	Q	R	S	T	U	V	W	X	y	Z
IN.	18.340	9.170	14.343	7.255	16.971	8.485	14.531	.622	3.091	9.81	3.063	8.000	12.687	17.090	13.260	15.740	.968	12.843	16.440	3.281	15.280	8.500	2.890	19.593
mm.	465.84	232.92	364.31	184.28	431.06	215.53	369.09	15.80	78.51	249.17	77.80	203.20	322.25	434.09	336.80	399.80	24.59	326.21	417.58	83.34	388.11	215.9	73.41	497.66

WELLS-GARDNER
ELECTRONICS CORPORATION

M O D E L
U 3 0 0 0

ISO 9001
certificate № 0104

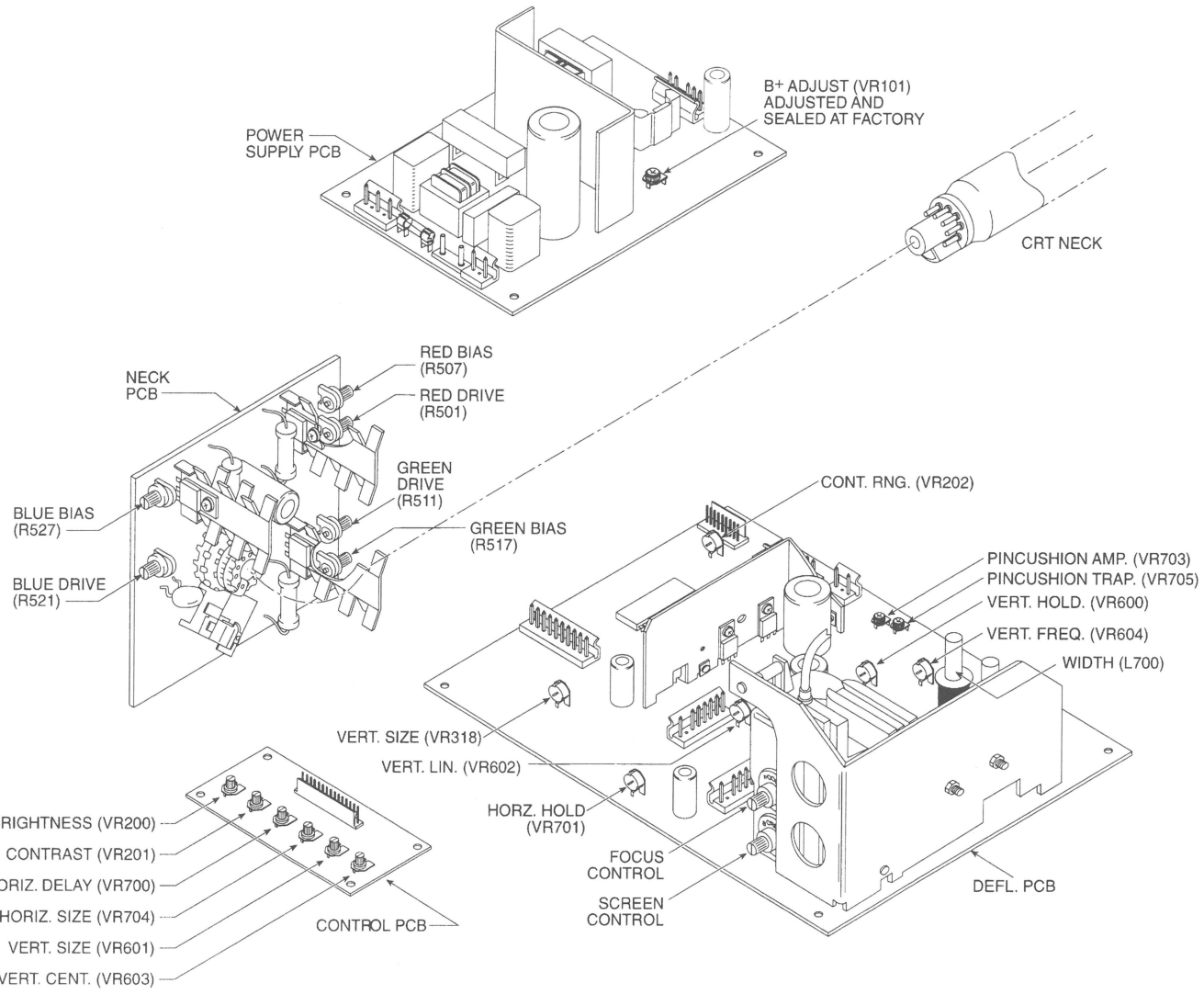

WELLS-GARDNER
ELECTRONICS CORPORATION

M O D E L U 3 0 0 0

ISO 9001 certificate № 0104

Monitor Connection Diagram

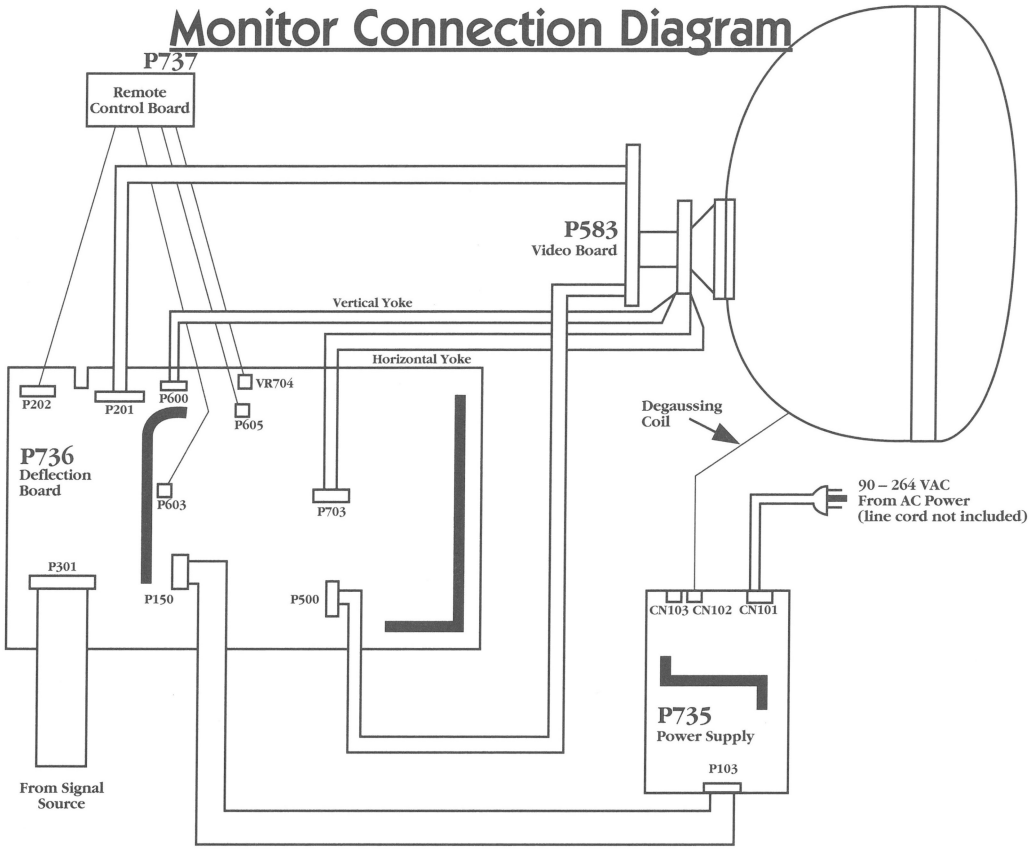

AC INPUT CONNECTOR: CN101

PCB Connector
Amp type 640445-5
Mating Amp type 640251-5

Pin	Description
1	AC hot
2	N/A
3	AC neutral
4	N/A
5	Ground

INPUT SIGNAL CONNECTOR: P301

PCB Connector
Amp type 1-640445-0
Mating Amp type 1-640251-0

Pin	Description
1	Horizontal sync
2	Vertical sync
3	Sync ground
4	Shield ground
5	Blue return
6	Green return
7	Red return
8	Blue video
9	Green video
10	Red video

Optional Cable Connector
Amp type 748364-1 (DB15)
Mating Amp type 748565-1

Pin	Description
1	Red video
2	Green video
3	Blue video
4	N/A
5	N/A
6	Red return
7	Green return
8	Blue return
9	N/A
10	Sync grounds
11	Sync grounds
12	N/A
13	Horizontal sync
14	Vertical sync
15	Shield ground

ISO 9001 REGISTERED QUALITY
certificate № 0104

REPLACEMENT PARTS LIST

Power Supply Board Assembly 25A1427-001 P735

DESIGNATION	DESCRIPTION	PART NO.
D101-D104	Diode, 1N5406	066X0135-001
D106	Diode, BYV28-200	066X0097-001
D107	Diode, MUR490	066X0126-002
D118	Diode, BYV28-200	066X0097-001
Q101	FET, SSP6N60	086X0334-001
U101	IC, UC3842AN Reg.	086X0257-001

REPLACEMENT PARTS LIST

Deflection Board Assembly
25A1438-001 (14"), 25A1440-001 (17"), 25A1424-001 (19")
P750 (14"), P753 (17"), P736 (19")

DESIGNATION	DESCRIPTION	PART NO.
D602	Diode, 1N4001	066X0071-001
D603	Diode, RL202	066X0147-001
D704	Diode, DD20R	066X0143-001
D705	Diode, MUR490	066X0126-002
F101	Fuse, 3.15A, 5 X 20 mm	016X0210-009
Q500, Q502, Q504	Transistor, 2SC3950	086X0290-001
Q501, Q503, Q505	Transistor, 2SC3782	086X0287-001
Q601	Transistor, 2SD525R	086X0074-001
Q602	Transistor, 2SB595R	086X0075-001
Q701	Transistor, 2SC3686	086X0286-001
U200	IC, LM1203 Video	086X0270-001
U300	IC, 74LS156 Demult.	086X0295-001
U302	IC, 74LS86 Exl-Or	086X0313-001
U303	IC, 74LS123 Dual-Mono	086X0338-001
U600	IC, TDA1175 Vert.	086X0347-001
U700	IC, LA7850 Horz.	086X0274-001

WELLS-GARDNER
ELECTRONICS CORPORATION

U3000

VGA RESOLUTION

ISO 9001
REGISTERED
QUALITY
certificate № 0104

LARGE SCREEN U3000
M2730 AND M3332
PRODUCT SPECIFICATIONS

SPECIFICATIONS
- CRT size (diagonal measure): **27",33"**
- Phosphor type: P22
- CRT etch: Polished faceplate; other faceplates available
- Striped trio spacing: .0.84 mm (27"), .89mm (33")

INPUT SIGNALS
- Input connector: 15 pin D-sub male; VGA compatible
- Video type: RGB analog
- Video input impedance: 75 ohm; 470 ohm optional
- Video level: 0.7 volts peak-to-peak; other levels optional
- Sync type: Standard VGA TTL sync; composite optional
- Sync input impedance: 4.7k ohms
- Horizontal sync frequency: 31.5 kHz
- Vertical sync frequency: 60 to 70 Hz

LIGHT OUTPUT
40 fL typical

GEOMETRY
- Horizontal linearity: ± 7% (27"), ± 5% (33")
- Vertical linearity: ± 5%
- Picture size regulation: 1%
- Geometric distortion: ± 2% max

POWER INPUT
- Input voltage: 90 - 264 VAC, 50 - 60 Hz; no isolation transformer required
- Maximum power: 160 watts

USER CONTROLS
- Remote controls: Brightness, contrast, horizontal size, horizontal centering, vertical size, vertical centering
- Internal controls: Horizontal hold, vertical hold, vertical linearity, focus

MECHANICAL
See additional pages

MISCELLANEOUS
- Operating temperature: 0 to 55 degrees C
- Agency compliance: U.L., C.S.A., D.H.H.S. radiation performance std., TUV

RESOLUTION
- Graphics modes: 640 X 200, 640 X 350, 640 X 480
- Video bandwidth: 25 MHz typical

SPECIFICATIONS SUBJECT TO CHANGE WITHOUT NOTICE.

WELLS-GARDNER
ELECTRONICS CORPORATION

U 3 0 0 0 0
MECHANICAL SPECIFICATIONS

ISO 9001 REGISTERED QUALITY certificate № 0104

DIMENSIONS SHOWN ARE FOR REFERENCE ONLY. FOR SPECIFICS CONTACT W.G.E.C. ENGINEERING.
2701 North Kildare Avenue Chicago, Illinois 60639 Phone (773) 252-8220 Fax (773) 252-8072

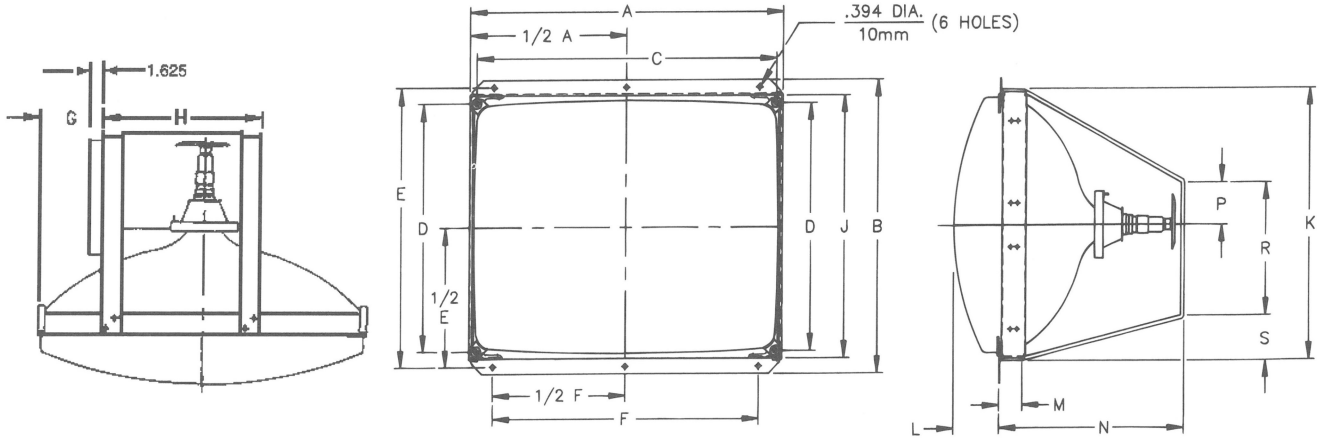

33V Color Monitor 33–U0 *(F33M)*

WG P/N: WGM3332-U0TS65G

DIM.	A	B	C	D	E	F	G	H	J	K	L	M	N	P	R	S
IN.	28.274	25.281	27.104	21.344	24.031	24.031	5.268	13.736	22.601	23.406	4.108	2.075	16.700	3.625	11.437	3.880
mm.	718.16	642.14	688.44	542.14	610.39	610.39	133.81	348.89	574.07	594.51	104.34	52.781	424.18	92.075	290.50	98.552

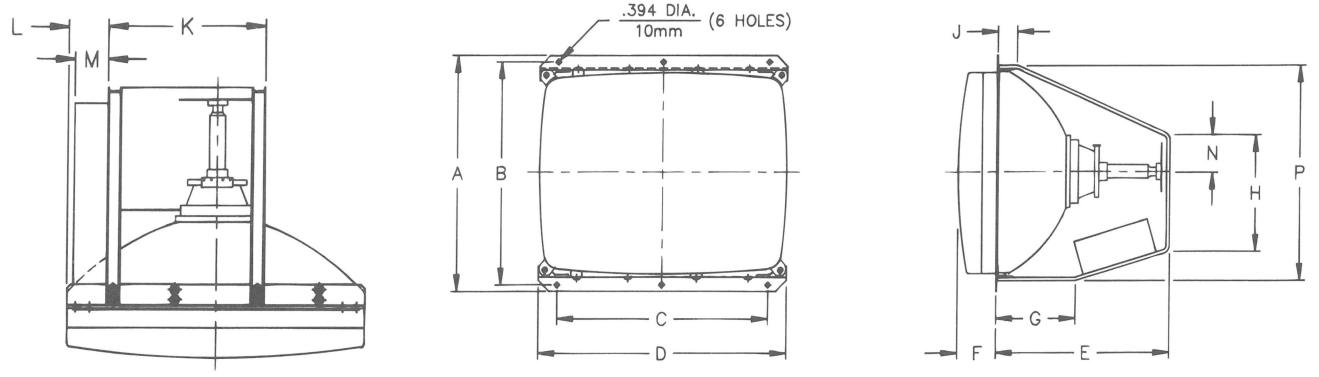

27V Color Monitor 27–U0 *(F27M)*

WG P/N: WGM2730-U0TS55F

DIM.	A	B	C	D	E	F	G	H	J	K	L	M	N	P
IN.	21.937	20.644	20.6644	24.500	16.125	3.230	7.375	10.125	1.750	12.000	3.875	2.750	3.250	20.210
mm.	557.20	524.36	524.36	622.30	409,58	82.04	187.33	257.18	44.45	304.80	98.43	69.85	82.55	513.34

WELLS-GARDNER
ELECTRONICS CORPORATION

LARGE SCREEN
U 3 0 0 0

ISO 9001 REGISTERED QUALITY certificate № 0104

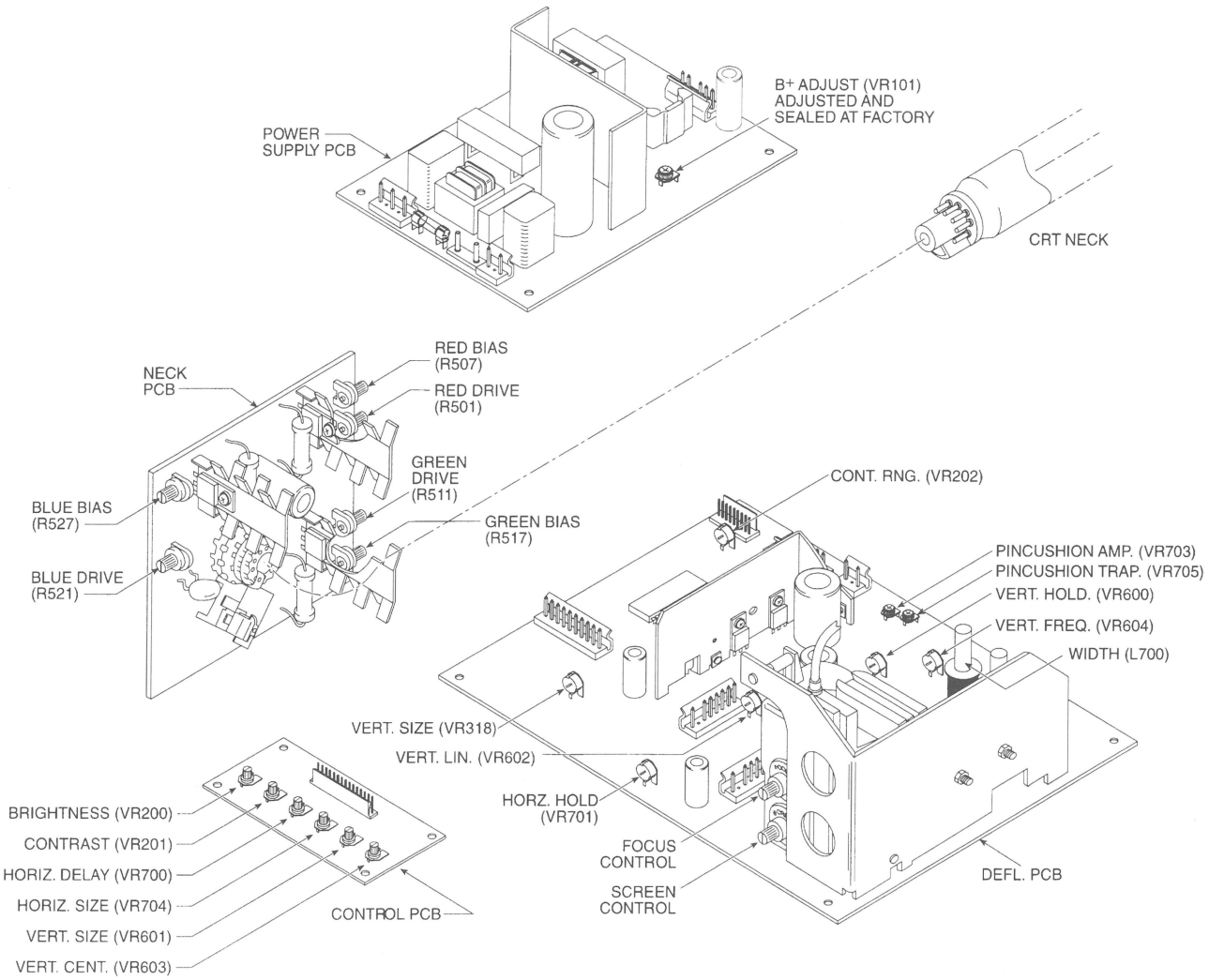

WELLS-GARDNER
ELECTRONICS CORPORATION

LARGE SCREEN U 3 0 0 0

ISO 9001 REGISTERED QUALITY certificate № 0104

Monitor Connection Diagram

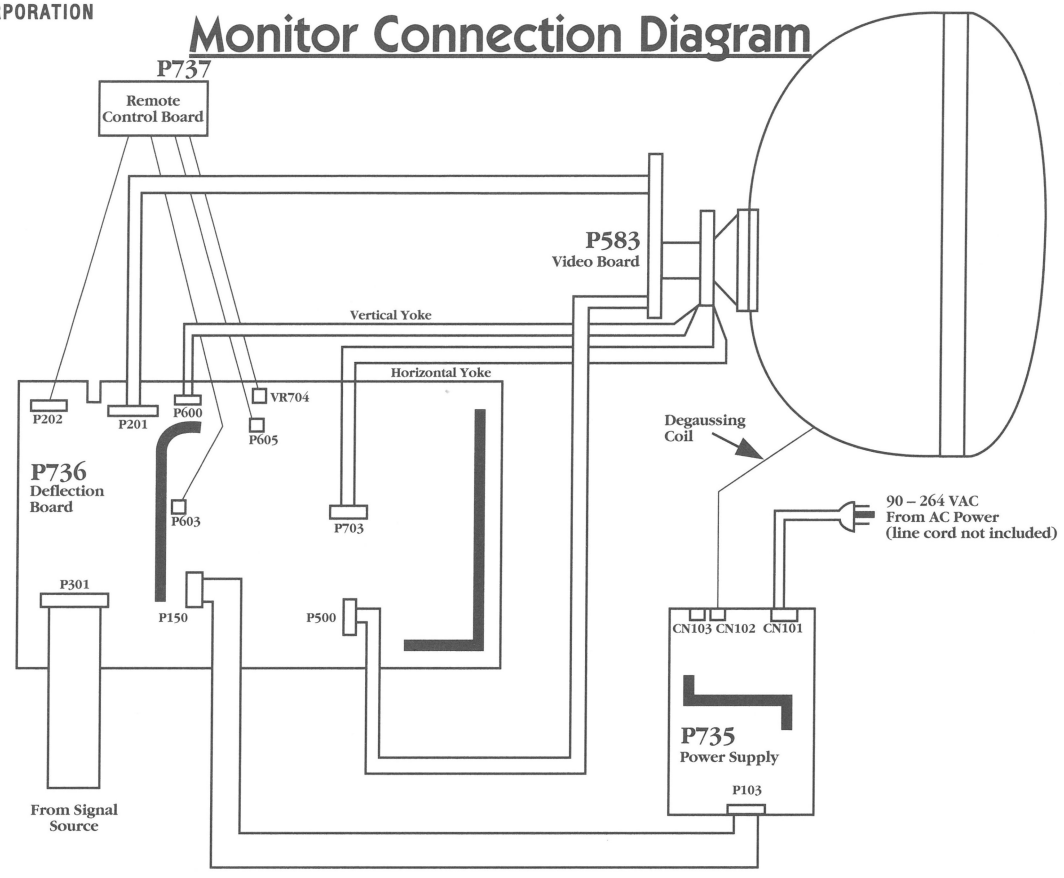

AC INPUT CONNECTOR: CN101

PCB Connector
Amp type 640445-5
Mating Amp type 640251-5

Pin	Description
1	AC hot
2	N/A
3	AC neutral
4	N/A
5	Ground

INPUT SIGNAL CONNECTOR: P301

PCB Connector
Amp type 1-640445-0
Mating Amp type 1-640251-0

Pin	Description
1	Horizontal sync
2	Vertical sync
3	Sync ground
4	Shield ground
5	Blue return
6	Green return
7	Red return
8	Blue video
9	Green video
10	Red video

Optional Cable Connector
Amp type 748364-1 (DB15)
Mating Amp type 748565-1

Pin	Description
1	Red video
2	Green video
3	Blue video
4	N/A
5	N/A
6	Red return
7	Green return
8	Blue return
9	N/A
10	Mode select
11	Sync return
12	N/A
13	Horizontal sync
14	Vertical sync
15	Shield ground

ISO 9001 REGISTERED QUALITY
certificate № 0104

2730 REPLACEMENT PARTS LIST

Main, Neck & Control PCB Assembly Parts List

DIODES

DESIGNATION	DESCRIPTION	PART NO.
D101-D104	DIODE, IN5406	066X0135-001
D106	DIODE, BYV28-200	066X0097-001
D107	DIODE, MUR490	066X0126-002
D118	MODE, BYV28-200	066X0097-001
Q101	FET, SSP6N60	086X0334-001
U101	IC, , UC3842AN REG.	086X0257-001

DEFLECTION BOARD ASSEMBLY

DESIGNATION	DESCRIPTION	PART NO.
D602	DIODE, , IN4001	066X0071-001
D603	DIODE, RL202	066X0147-001
D704	DIODE, DD20R	066X0143-001
D705	DIODE, MUR490	066X0126-002
F101	FUSE, 3.15A, 5 X 20 MM	016X0210-009
Q500, , , Q502,, Q504	TRANSISTOR, 2SC3950	086X0290-001
Q502, , , Q503,, Q505	TRANSISTOR, 2SC3782	086X0287-001
Q601	TRANSISTOR, 2SD525R	086X0074-001
Q602	TRANSISTOR, , 2SB595R	086X0075-001
Q701	TRANSISTOR, , 2SC3688	068X0321-001
U200	IC, LM1203 VIDEO	086X0270-001
U300	IC, 74LS156 DEMULT..	086X0295-001
U302	IC, 74LS86 EXL-OR	086X0313-001
U303	IC, 74LS123 DUAL-MONO	086X0338-001
U600	IC, TDA1175 VERT	086X0347-001
U700	IC, LA7850 HORZ.	086X0274-001

MISCELLANEOUS

DESIGNATION	DESCRIPTION	PART NO.
—	29", CRT	088X0370-001
—	DEFLECTION BOARD ASSEMBLY	025A1442-001
—	POWER SUPPLY BOARD ASSEMBLY	025A1447-001
—	VIDEO BOARD ASSEMBLY	025A1354-001
—	REMOTE CONTROL BOARD ASSEMBLY	025A1425-001

WELLS-GARDNER
ELECTRONICS CORPORATION

U3000

VGA RESOLUTION

ISO 9001
REGISTERED QUALITY
certificate № 0104

LARGE SCREEN U3000
M2830
PRODUCT SPECIFICATIONS

SPECIFICATIONS
- CRT size (diagonal measure): 28" (16:9 aspect ratio)
- Phosphor type: P22
- CRT etch: Polished faceplate; other faceplates available
- Striped trio spacing: 0.70 mm (28")

INPUT SIGNALS
- Input connector: 15 pin D-sub male; VGA compatible
- Video type: RGB analog
- Video input impedance: 75 ohm; 470 ohm optional
- Video level: 0.7 volts peak-to-peak; other levels optional
- Sync type: Standard VGA TTL sync; composite optional
- Sync input impedance: 4.7k ohm
- Horizontal sync frequency: 31.5 kHz
- Vertical sync frequency: 60 to 70 Hz

LIGHT OUTPUT
40 fL typical

GEOMETRY
- Horizontal linearity: ± 5%
- Vertical linearity: ± 5%
- Picture size regulation: 1%
- Geometric distortion: ± 2% max

POWER INPUT
- Input voltage: 90-264 VAC, 50-60 Hz; no isolation transformer required
- Maximum power: 160 watts

USER CONTROLS
- Remote controls: Brightness, contrast, horizontal size, horizontal centering, vertical size, vertical centering
- Internal controls: Horizontal hold, vertical hold, vertical linearity, focus

MECHANICAL
See additional pages

MISCELLANEOUS
- Operating temperature: 0 to 55 degrees C
- Agency compliance: UL, CSA, DHHS radiation performance std., TUV

RESOLUTION
- Graphics modes: 640 X 200, 640 X 350, 640 X 480
- Video bandwidth: 25 MHz typical

SPECIFICATIONS SUBJECT TO CHANGE WITHOUT NOTICE.

WELLS-GARDNER
ELECTRONICS CORPORATION

U 3 0 0 0 0
MECHANICAL SPECIFICATIONS

ISO 9001 REGISTERED QUALITY certificate № 0104

DIMENSIONS SHOWN ARE FOR REFERENCE ONLY. FOR SPECIFICS CONTACT W.G.E.C. ENGINEERING.
2701 North Kildare Avenue Chicago, Illinois 60639 Phone (773) 252-8220 Fax (773) 252-8072

WG P/N: WGM2830-U0TS32J

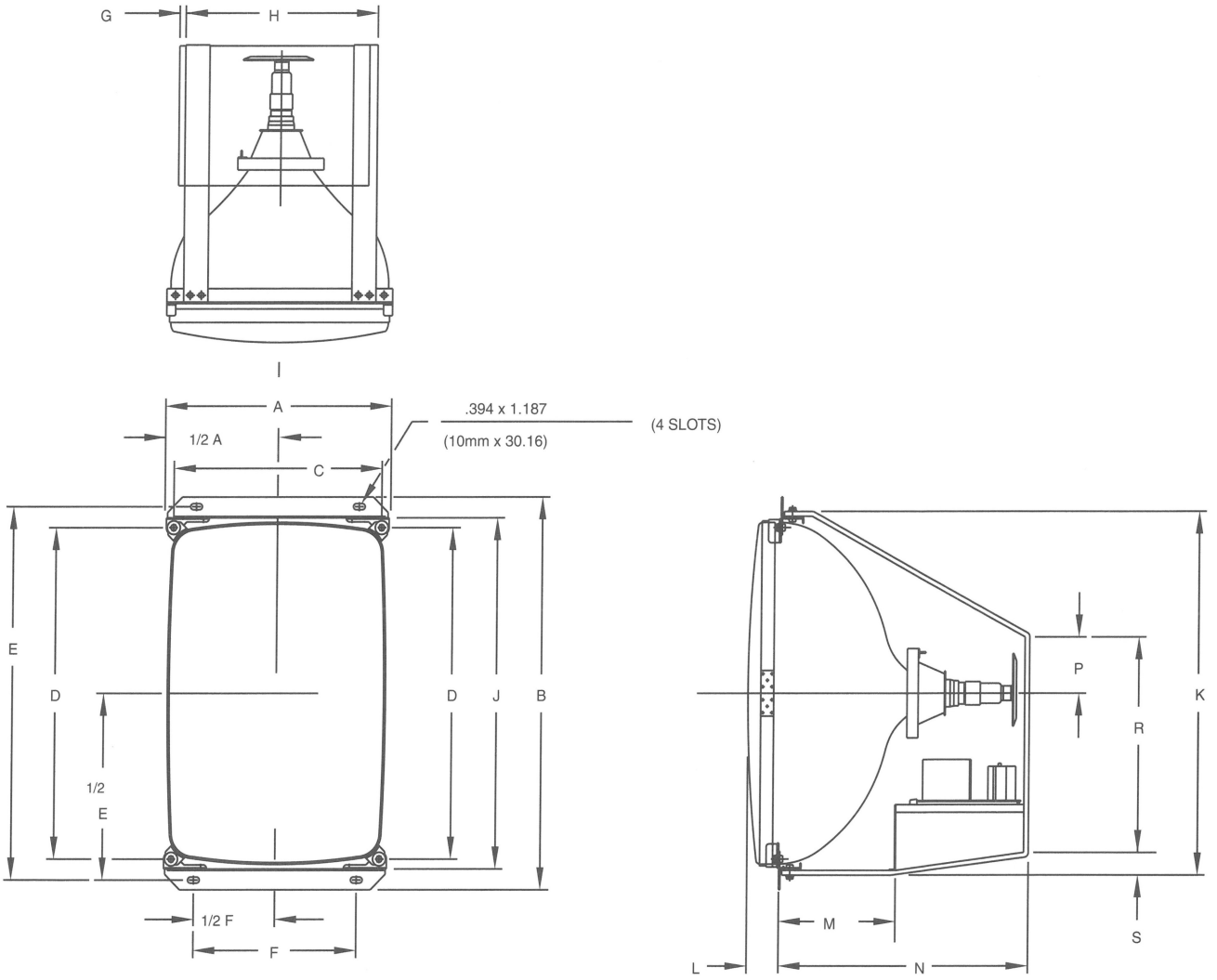

39V Color Monitor (15kHz) 39-U0 *(F33M)*

DIM.	A	B	C	D	E	F	G	H	J	K	L	M	N	P	R	S
IN.	16.000	29.062	15.062	24.768	27.812	8.00	.500	12.5	26.072	26.688	2.937	8.145	17.895	4.188	16.625	.687
mm.		106	106													

WELLS-GARDNER
ELECTRONICS CORPORATION

U3100

SVGA RESOLUTION

U 3 1 0 0
PRODUCT SPECIFICATIONS

SPECIFICATIONS
- CRT size (diagonal measure): **14", 19"**
- Phosphor type: P22
- CRT etch: Polished faceplate; Other faceplates available
- Dot trio spacing: 0.28 mm (14"), 0.71 mm (19")

INPUT SIGNALS
- Input connector: 15 pin D-sub high density male; VGA compatible
- Video type: RGB analog
- Video input impedance: 75 ohm
- Video level: 0.7 volts peak-to-peak
- Sync type: Standard VGA/SVGA TTL sync
- Sync input impedance: 470 ohm (H sync), 1 k ohm (V sync)
- Horizontal sync frequency: 31.5 or 35.5 kHz
- Vertical sync frequency: 56 to 87 Hz

LIGHT OUTPUT
30 fL typical

GEOMETRY
- Horizontal linearity: ±5%
- Vertical linearity: ±5%
- Picture size regulation: 2%
- Geometric distortion: ±2% max.

POWER INPUT
- Input voltage: 90-264 VAC, 50-60 Hz; no isolation transformer required.
- Maximum power: 90 watts typical (19")

USER CONTROLS
- Remote controls: Brightness, contrast, horizontal size, horizontal centering, vertical size, vertical centering.
- Internal controls: Horizontal hold, vertical linearity, focus, G2 (screen).

MECHANICAL
See reverse side

MISCELLANEOUS
- Operating temperature: 0 to 55 degrees C.
- Agency compliance: UL, CSA, DHHS radiation performance std., TUV.

RESOLUTION
- Graphics modes: VGA: 640 x 200, 640 x 350, 640 x 480
  SVGA: 800 x 600, 1024 x 768 (interlaced)
- Video bandwidth: 22 MHz typical.

SPECIFICATIONS SUBJECT TO CHANGE WITHOUT NOTICE

WELLS-GARDNER
ELECTRONICS CORPORATION

U 3 1 0 0
MECHANICAL SPECIFICATIONS

ISO 9001 REGISTERED QUALITY certificate № 0104

DIMENSIONS SHOWN ARE FOR REFERENCE ONLY. FOR SPECIFICS CONTACT W.G.E.C. ENGINEERING.
2701 North Kildare Avenue Chicago, Illinois 60639 Phone (773) 252-8220 Fax (773) 252-8072

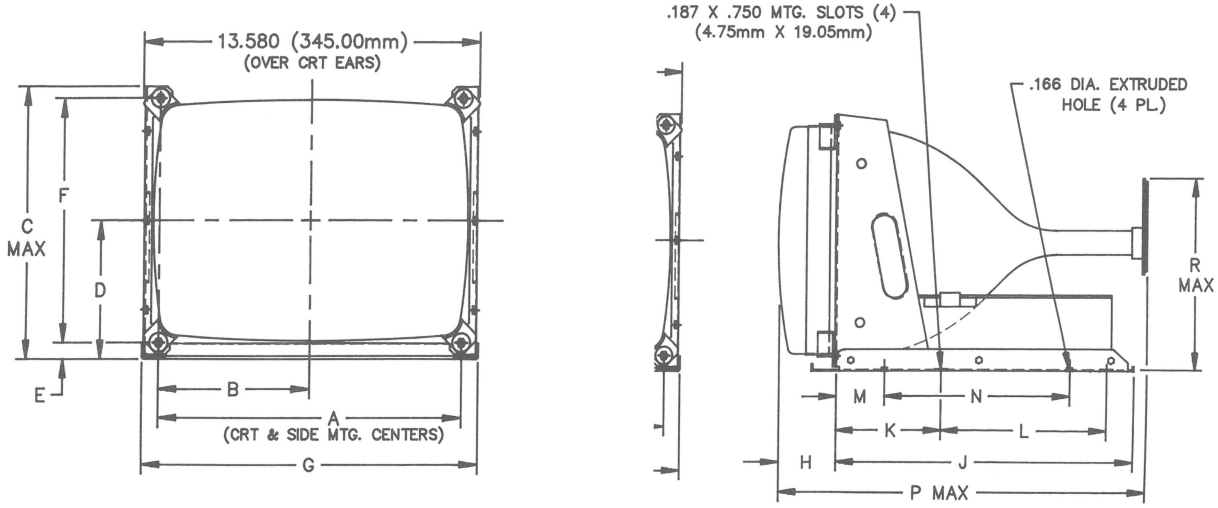

14V Monitor 14–M1 *(F13HM1)* WG P/N: WGM1431-M1DS09H

DIM.	A	B	C	D	E	F	G	H	J	K	L	M	N	P	R
IN.	12.260	6.130	10.673	5.334	.547	9.575	12.980	2.450	10.860	4.300	5.500	1.550	7.500	13.625	7.375
mm.	311.40	155.70	271.10	135.50	13.89	243.20	329.70	62.23	275.84	109.22	139.70	39.37	190.50	346.08	187.33

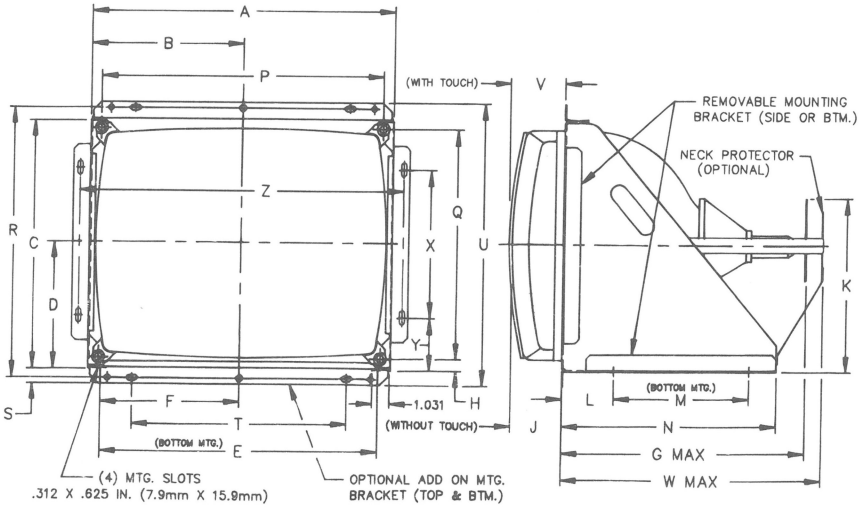

19V Color Monitor 19–M2 *(F19HM2)* WG P/N: WGM1931-M2TS26H

DIM.	A	B	C	D	E	F	G	H	J	K	L	M
IN.	18.340	9.170	14.343	7.255	16.971	8.485	14.531	.622	3.091	9.81	3.063	8.000
mm.	465.84	232.92	364.31	184.28	431.06	215.53	369.09	15.80	78.51	249.17	77.80	203.20

WELLS-GARDNER
ELECTRONICS CORPORATION

MODEL
14K3101
19K3102

ISO 9001
certificate № 0104

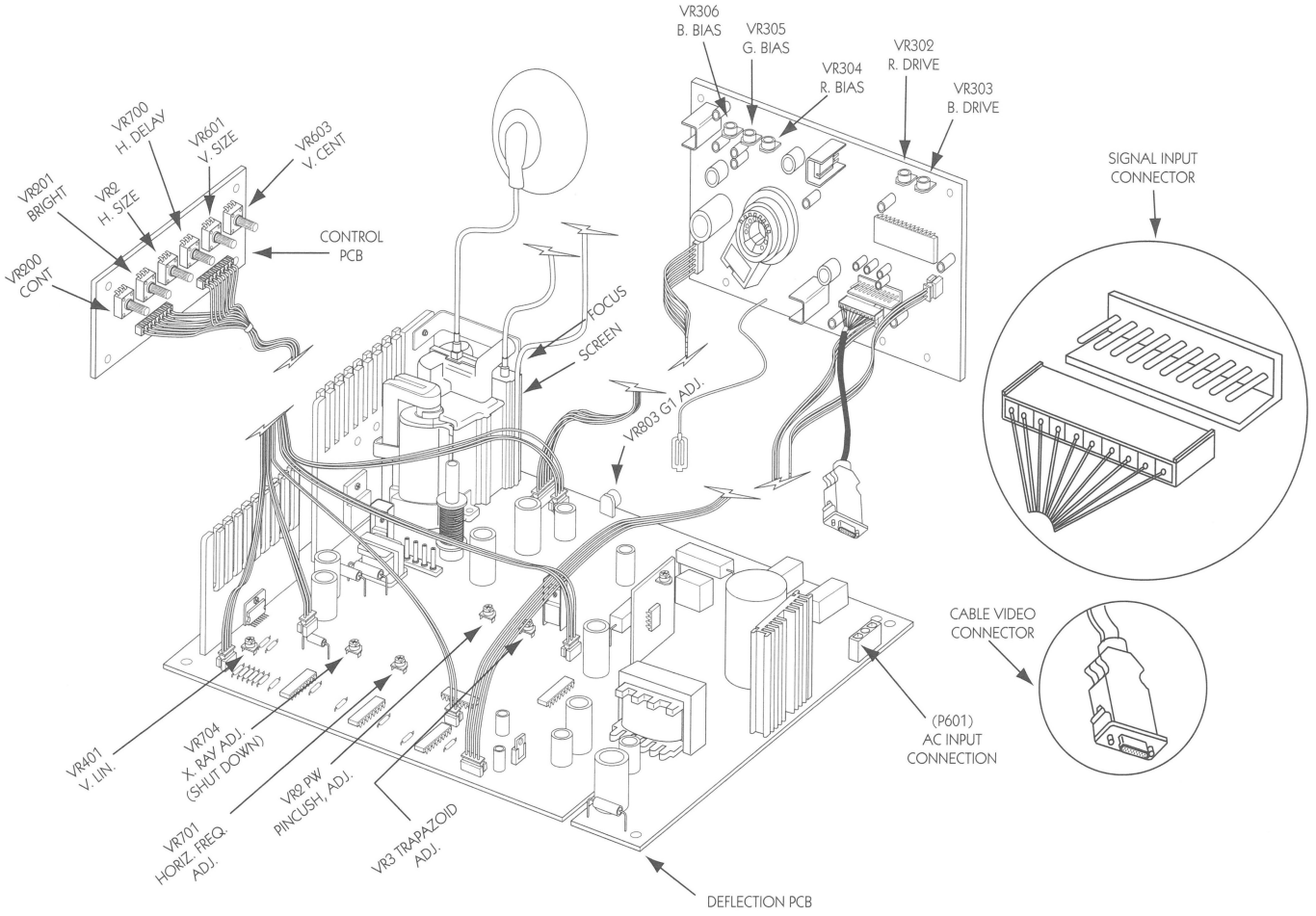

AC INPUT CONNECTOR: P601

AMP 350760-4
Mating AMP type 1-480700-0

Pin	Description
1	AC hot
2	Earth ground
3	AC neutral

CABLE VIDEO CONNECTOR

15 Pin Subminiature D-type

Pin	Description	Pin	Description
1	Red video input	8	Blue video ground
2	Green video input	9	N/C
3	Blue video input	10	Digital/sync ground
4	N/C	11	Reserved (mode)
5	Reserved (test)	12	N/C
6	Red video ground	13	Horizontal sync
7	Green video ground	14	Vertical sync
		15	N/C

WELLS-GARDNER
ELECTRONICS CORPORATION

19K3181

ISO 9001 REGISTERED QUALITY certificate № 0104

REPLACEMENT PARTS LIST

Main, Neck, Control PCB Assembly Parts List

DIODES

DESIGNATION	DESCRIPTION	PART NO.
D1, D403, D404, D701A, D801, D802, D804, D805	DIODE 1N4148	066X0099-001
D301, D302, D303, D507, D508	DIODE 1N4148	066X0099-001
D402	DIODE 1N4003	8-100D-010-81
D604, D606, D701, D803	DIODE 1N4942, 1A, 200V, BYT52	8-100D-011-81
D807	DIODE 10DF4, 1A, 400V	8-100D-015-41
D601, D602, D603	DIODE HER103, 1A, 200V	8-100D-012-81
D2	DIODE DD54RC SANYO	066X0150-001
D610, D611, D806	DIODE HER204	8-100D-003-41
D3	DIODE MUR460	8-100D-025-11
D607, D608, D609	DIODE HER308, 3A, 1KV, BYT56M	8-100D-004-41
ZD401A	DIODE ZENER 2.4V	8-100D-002-81
D602	DIODE RS405, 4A, 600V, KBL06-G	8-100D-006-41
ZD402, ZD403	DIODE ZENER 5.1V, 5%, 0.5W	066X0040-028
ZD701	DIODE ZENER HZ6C2, 6.2V, 0.5W	8-100D-008-81
ZD801, ZD301	DIODE ZENER HZQA2, (8V2)	8-100D-009-81

INTEGRATED CIRCUITS

DESIGNATION	DESCRIPTION	PART NO.
IC401, IC702	IC 74LS123 DUAL MONO	086X0338-001
IC402	TTL TDA1675A	086X0360-001
IC403	IC L4051 BCP	8-100S-002-11
IC602	TTL IC7805, 5V, 1A	8-100S-011-11
IC701	IC 74LS86, EXCL-OR	086X0313-001
IC703	IC LA7850 H/V SYNC PROC SANYO	086X0274-001
IC501	IC PWM, UC3842AN	086X0257-001
IC201	IC LM1203N, RGB, VID, AMP, NSC	086X0270-001

TRANSFORMERS

DESIGNATION	DESCRIPTION	PART NO.
L1	COIL PINCUSHION	1-459L-004-11
L2	COIL LINEARITY	1-459L-001-11
T601	SWITCHING TRANSFORMER	1-441T-004-11
T703	FLYBACK TRANSFORMER	1-439T-002-11

TRANSISTORS

DESIGNATION	DESCRIPTION	PART NO.
Q301	TRANSISTOR 2SC458C	8-100X-005-91
Q307, Q310, Q313	TRANSISTOR 2SB716A	8-100X-008-91
Q302, Q303, Q304	TRSTR 2N2369, MOT	086X0157-001
Q306, Q309, Q312	TRANSISTOR 2S756A	8-100X-014-91
Q305, Q308, Q311	TRANSISTOR 2SC3788	8-110X-013-11
Q1	TRSTR 2N3904 MOT	086X0113-501
Q2	TRSTR 2N3906 MOT	086X0114-501
Q3	TRSTR 2SD525R	086X0074-001
Q601	TRSTR N-MOSFET 6N60	086X0334-001
Q602	TRSTR 2SB857C/TIP 127	8-100X-011-11
Q603, Q803	TRSTR 2SC1921C	8-100X-101-91
Q701	TRSTR 2SA1015GR	8-100X-002-11
Q702	TRSTR 2SC458C	8-100X-005-11
Q703, Q805	TRSTR 2SC1213C	8-100X-004-11
Q704	TRSTR 2SD667AC	8-100X-007-91
Q705	TRSTR 2SC4123	8-100X-003-11
Q804	TRSTR 2SB649AC	8-100X-006-11

VARIABLE POTENTIOMETERS

DESIGNATION	DESCRIPTION	PART NO.
VR603	VR, 1K OHM	1-121R-024-11
VR2	VR, 5K OHM	1-212R-023-11
VR200, VR700	VR, 10K OHM	1-221R-008-11
VR201	VR, 20K OHM	1-221R-025-11
VR601	VR, 100K OHM	1-221R-007-11

MISCELLANEOUS

DESIGNATION	DESCRIPTION	PART NO.
R604	RES .33 OHM 5%, 1W, WW	043X0477-008
R601	CEMENT RES 4.7 OHM 7W	1-218R-017-11
F601	FUSE 3.15A 5X20 IEC/UL SLO-BLO	016X0211-009
CRT	CRT 14 INCH, M34KXG30X55	088X0379-001
CRT	CRT 19 INCH, A48ACB24X	088X0290-506

WELLS-GARDNER
ELECTRONICS CORPORATION

U5000

STANDARD RES/MID RES

ISO 9001
REGISTERED QUALITY
certificate № 0104

U 5 0 0 0 0
PRODUCT SPECIFICATIONS

SPECIFICATIONS
- CRT size (diagonal measure): **25", 27"**
- Phosphor type: P22
- CRT etch: Polished faceplate; other faceplates available
- Striped trio spacing: 0.84 mm (25" and 27")

INPUT SIGNALS
- Input connector: 0.156 center header
- Video type: RGB analog
- Video input impedance: 1K Ohm; other values available
- Video level: 1.5 to 4 volts peak-to-peak; other levels optional
- Sync type: TTL sync; separate or composite, negative or positive
- Sync input impedance: 4.7 Ohms
- Horizontal sync frequency: 15.75 KHz or 25 KHz
- Vertical sync frequency: 47 to 63 Hz

LIGHT OUTPUT
40 fL typical

GEOMETRY
- Horizontal linearity: ± 5%
- Vertical linearity: ± 5%
- Picture size regulation: 2%
- Geometric distortion: ± 2% max

POWER INPUT
- Input voltage: 90 - 264 VAC, 50 - 70 Hz; no isolation transformer required
- Maximum power: 130 Watts

USER CONTROLS
- Remote controls: Brightness, contract, horizontal size, horizontal centering, horizontal frequency, vertical size, vertical centering, vertical frequency
- Internal controls: Focus

MECHANICAL
See additional pages

MISCELLANEOUS
- Operating temperature: 0 to 55 degrees C
- Agency compliance: U.L., C.S.A., D.H.H.S. radiation performance std., TUV

RESOLUTION
- Graphics modes: Standard Res - 640 X 200 (may be limited by the CRT)
  Mid Res - 640 X 400 (may be limited by the CRT)
- Video bandwidth: 15 MHz typical

SPECIFICATIONS SUBJECT TO CHANGE WITHOUT NOTICE.

WELLS-GARDNER
ELECTRONICS CORPORATION

U 5 0 0 0
MECHANICAL SPECIFICATIONS

ISO 9001 REGISTERED QUALITY certificate № 0104

DIMENSIONS SHOWN ARE FOR REFERENCE ONLY. FOR SPECIFICS CONTACT W.G.E.C. ENGINEERING.
2701 North Kildare Avenue Chicago, Illinois 60639 Phone (773) 252-8220 Fax (773) 252-8072

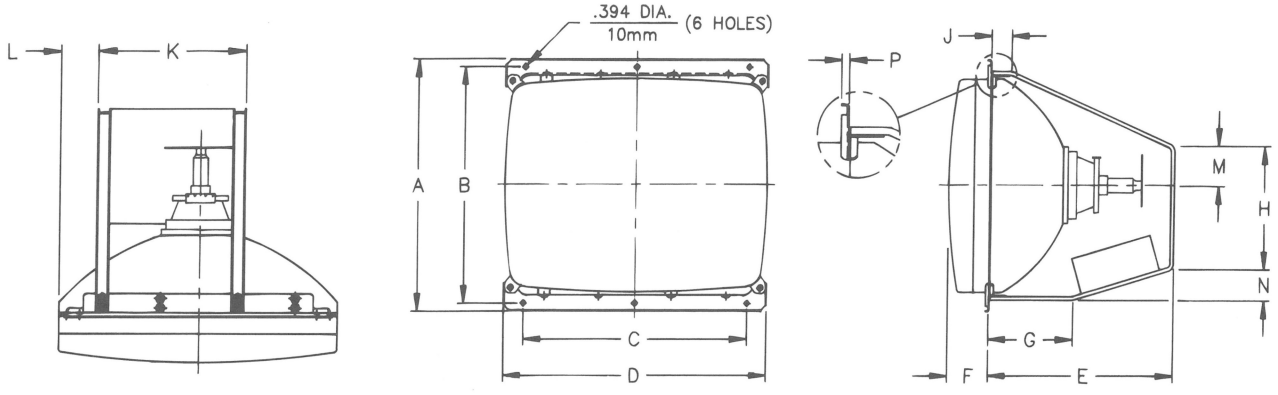

25V Color Monitor 25–U4 *(F25M4)*

WG P/N: WGM2550-U4GS22F

DIM.	A	B	C	D	E	F	G	H	J	K	L	M	N	P
IN.	20.630	19.291	19.291	23.000	16.125	3.590	7.375	10.125	1.750	12.000	3.140	3.250	2.562	.343
mm.	524.0	490.0	490.0	584.2	409.58	91.19	187.33	257.18	44.45	304.8	79.76	82.55	65.07	8.71

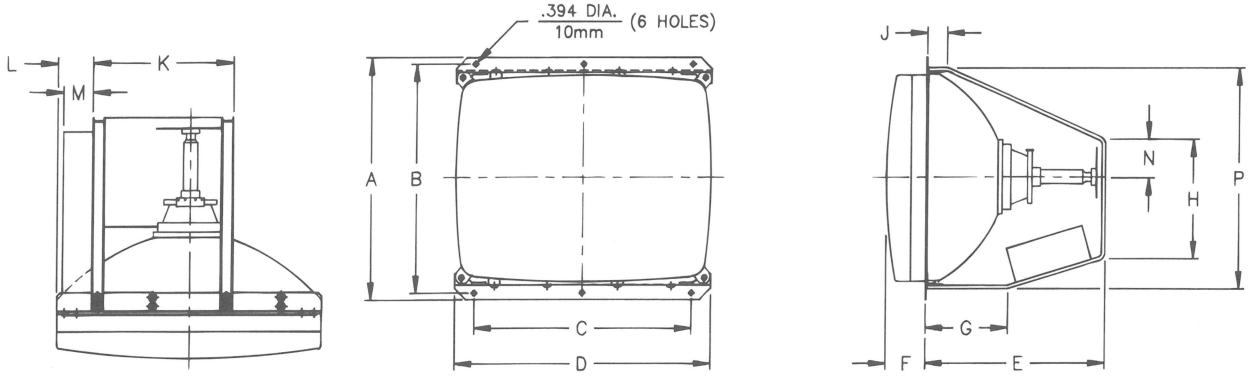

27V Color Monitor 27–U0 *(F27M)*

WG P/N: WGM2752-U0GS37F

DIM.	A	B	C	D	E	F	G	H	J	K	L	M	N	P
IN.	21.937	20.644	20.644	24.500	16.125	3.230	7.375	10.125	1.750	12.000	3.875	2.750	3.250	20.210
mm.	557.20	524.36	524.36	622.30	409.58	82.04	187.33	257.18	44.45	304.80	98.43	69.85	82.55	513.34

WELLS-GARDNER
ELECTRONICS CORPORATION

M O D E L
U 5 0 0 0

ISO 9001
certificate № 0104

DIMENSIONS SHOWN ARE FOR REFERENCE ONLY. FOR SPECIFICS CONTACT W.G.E.C. ENGINEERING.
2701 North Kildare Avenue Chicago, Illinois 60639 Phone (773) 252-8220 Fax (773) 252-8072

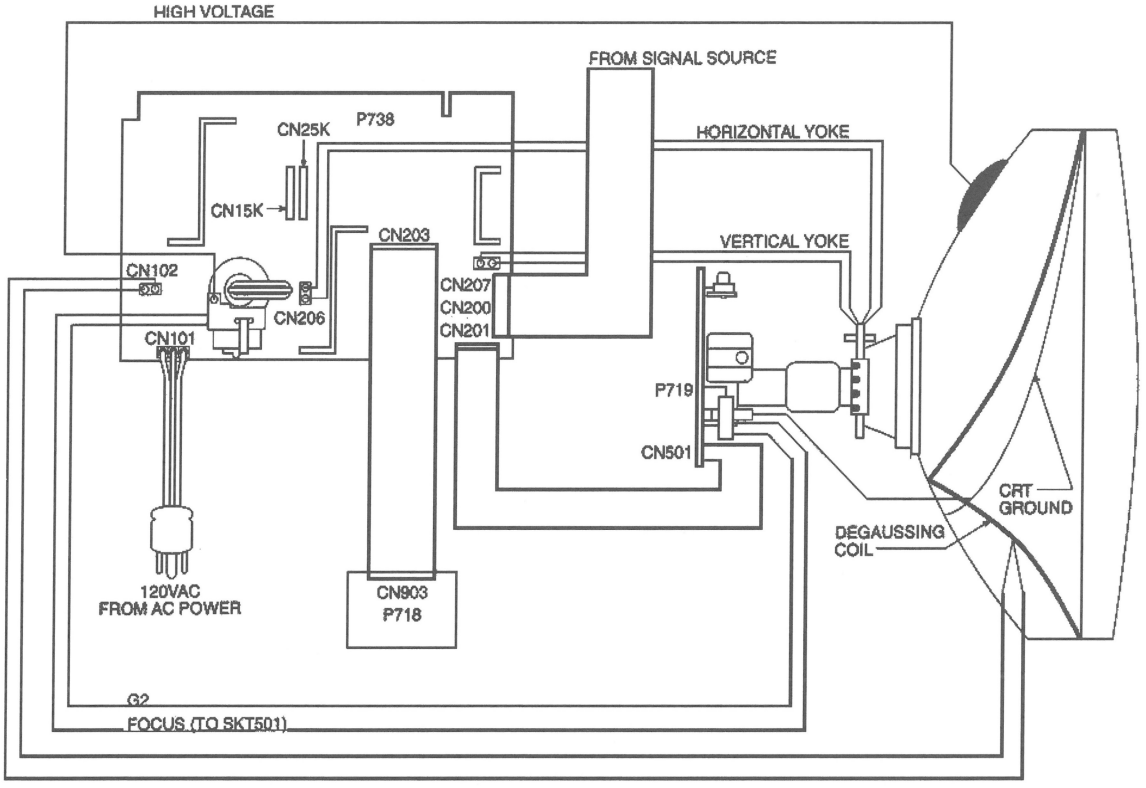

AC INPUT CONNECTOR: CN101

AMP 350760-4
Mating AMP type 1-480700-0

Pin	Description
1	AC hot
2	Earth ground
3	AC neutral

MODE SELECTION CONNECTORS

CN15K	15kHz Operation
CN25K	25kHz Operation

INPUT SIGNAL CONNECTOR: CN200

AMP 1-640445-1
Mating AMP type 1-640428-1

Pin	Description
1	Red
2	Green
3	Blue
4	Gnd
5	Vertical
6	Horizontal
7	
8	Gnd
9	Vertical
10	Horizontal

WELLS-GARDNER
ELECTRONICS CORPORATION

M O D E L
U 5 0 0 0

ISO 9001
certificate № 0104

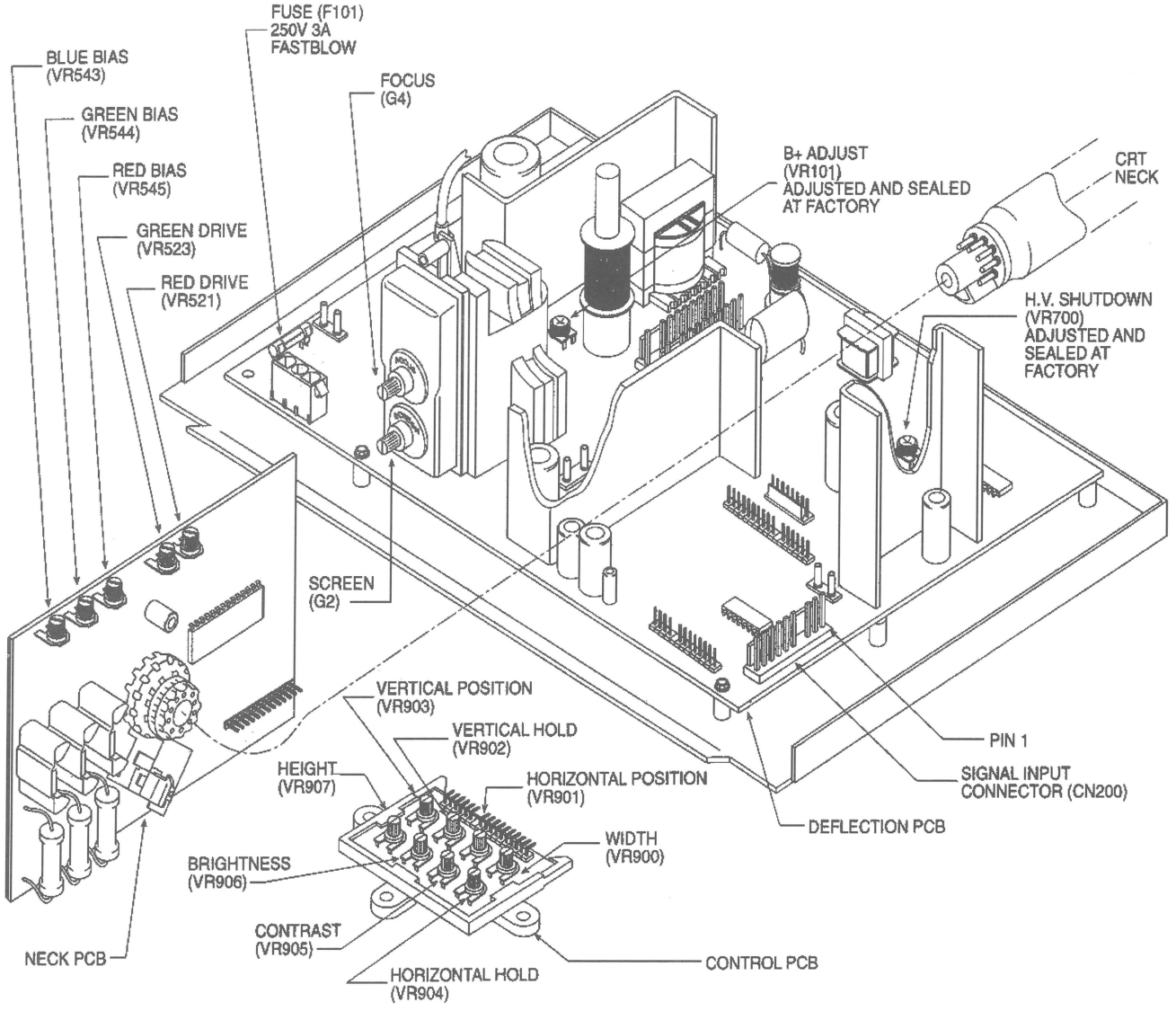

WELLS-GARDNER
ELECTRONICS CORPORATION

ISO 9001 REGISTERED QUALITY
certificate № 0104

REPLACEMENT PARTS LIST

Power Supply Board Assembly 25A1427-001 P735

FINAL ASSEMBLY PAR18
Y63E51 91 -000

1	038A7448-000	ASSEMBLY: CRT BRKT MTG 2)
2	038A7469-000	ASSEMBLY: CHASSIS PAN
3	038A7520-000	ASSEMBLY: CRT GND WIRE
4	001X0802-002	DEGAUSSING COIL STRAP (4)
5	001X0811-001	BARRIER NECK PCB
6	002X0602-005	SPACER 5/16 (5)
7	004X2577-001	PCB SUPPORT
8	009A2963-002	COIL DEGAUSS 25" CRT ALUM
9	020X1794-126	SCR 1/4-20x518 HH WSH/LK (4)
10	025X3299-001	BRKT U-CHANNEL (2)
11	030X0762-001	CABLE TIE (7)
12	030X0765-001	LUG
13	030X0827-001	WIRE CLAMP
14	088X0351-506	CRT 25" C MVA63AFW22X PHILIPS
15	089X0113-001	RTV SILICON RUBBER
16	089X0133-001	ADHESIVE 2 PART EPOXY
17	312X1205-206	SCR SWG #6-32x3/8 HWH (2)
18	312X1505-906	SCR SWG 8-32x3/8 HWH GRN
19	312X1805-206	SCR SWG 10-24x3/8 HWH (12)
20	Y63E5191-OOOL	RS LITERATURE - Y63E5191

CONTROL BOARD ASSEMBLY
025A1 41 5-001
P71 8

21		004X2572-001	PCB HOLDER
22		013X1331-001	CABLE ASSY CONTROL PCB
23		085X0375-001	PC BOARD
24	CN903	006A0474-017	HEADER 17 PIN 0.100 CTR R.A.
25	R900	320X2200-000	WIRE #22 BARE SOLID
26	R901	340X2272-934	RES 2.7K OHM 5%1/4 CF
27	R902	340X2222-934	RES 2.2K OHM 5%1/4 CF
28	VR900	040X0703-004	TRIM POT SK OHM 0.5W 20%
29	VR901	040X0703-006	TRIM POT 20K OHM 0.5W 20%
30	VR902	040X0703-008	TRIM POT 200K OHM 0.5W 20%
31	VR903	040X0703-005	TRIM POT 1 OK OHM 0.5W 20%
32	VR904	040X0703-004	TRIM POT SK OHM 0.5W 20%
33	VR905	040X0703-005	TRIM POT 10K OHM 0.5W 20%
34	VR906	040X0703-007	TRIM POT 100K OHM 0.5W 20%
35	VR907	040X0703-008	TRIM POT 200K OHM 0.5W 20%

NECK BOARD ASSEMBLY
025A1 41 4-001
P71 9

36		013X1330-001	CABLE ASSY VIDEO PCB
37		025X3341-001	HEAT SINK (QTY 3)
38		085X0376-001	PC BOARD
39	W507	340X2101-934	RES 100 OHM 5%1/4W
40	W522	340X2101-934	RES 100 OHM 5%1/4W
41	C501	045X0560-518	CAP LYT 10uF 25V
42	C502	045X0560-518	CAP LYT 10uF 25V
43	C503	045X0560-518	CAP LYT 10uF 25V
44	C504	045X0566-007	CAP LYT 4.7uF 20% 200V 105 C
45	C505	080X0099-062	CAP 0.02uF +80-20% Z5U 500V
46	C506	047X0788-512	CAP 0.1uF 20% Z5U 50V MON
47	C507	045X0560-554	CAP LYT 100uF 20%16V
48	C508	047X0788-512	CAP 0.1uF 20% Z5U 50V MON
49	C510	047X0788-512	CAP 0.1uF 20% Z5U 50V MON
50	C512	045X0560-519	CAP LYT 1.0uF 20% 50V
51	C513	047X0788-512	CAP 0.1UF 20% Z5U 50V MON
52	C514	047X0788-512	CAP 0.1uF 20% Z5U 50V MON
53	C515	047X0788-512	CAP 0.1uF 20% Z5U 50V MON
54	C516	047X0788-512	CAP 0.1uF 20% Z5U 50V MON
55	C517	047X0788-512	CAP0.1uF 20% Z5U 5OV MON
56	C518	047X0788-512	CAP 0.1uF 20% Z5U 50V MON
57	C519	045X0560-501	CAP LYT 4.7uF 25V
58	C520	047X0788-512	CAP 0.1uF 20% Z5U 50V MON
59	C521	047X0788-512	CAP 0.1uF 20% Z5U 50V MON
60	C525	047X0788-033	CAP 680pF 10% NPO 50V MON
61	C526	047X0788-033	CAP 680pF 10% NPO 50V MON
62	C527	047X0788-033	CAP 680pF 10% NPO 50V MON
63	C529	080X0099-095	CAP 1000pF 10% ZSF 2KV CER
64	C530	045X0560-518	CAP LYT 10uF 25V
65	C53 1	080X0099-703	CAP 3.9p pF N PO 50V CER
66	C532	080X0099-703	CAP 3.9pF NPO 50V CER
67	C533	080X0099-703	CAP 3.9pF NPO 50V CER
68	C540	090X0099-506	CAP 470pF 10% 25F
69	C541	045X0560-001	CAP LYT 4.7uF 25V
70	CN501	006A0473-013	HEADER 13 PIN 0.100 CTR
71	CRT-GND	030X0756-001	PIN BEAD CHAIN
72	D501	066X0070-001	DIODE 1N914B
73	D502	066X0070-001	DIODE 1N914B
74	D503	066X0070-001	DIODE 1N914B
75	D504	066X0062-001	DIODE SANYO GMA02
76	D505	066X0062-001	DIODE SANYO GMA02
77	D506	066X0062-001	DIODE SANYO GMA02
78	D507	066X0070-001	DIODE 1N914B
79	G2	030X0797-001	PLUG V PIN
80	L501	009A2811-004	COIL 12uH
81	L502	009A2811-004	COIL 12uH
82	L503	009A2811-004	COIL 12uH
83	0501	086X0113-501	TRSTR 2N3904 MOT
84	Q502	086X0113-501	TRSTR 2N3904 MOT
85	Q503	086X0287-001	TRSTR NPN SANYO 2SC3782

WELLS-GARDNER
ELECTRONICS CORPORATION

ISO 9001 REGISTERED QUALITY
certificate № 0104

NECK BOARD ASSEMBLY
025A1414-001
P719

86	Q504	086X0287-001	TRSTR NPN SANYO 2SC3782
87	Q505	086X0287-001	TRSTR NPN SANYO 2SC3782
88	Q506	086X0113-501	TRSTR 2N3904 MOT
89	Q507	086X0113-501	TRSTR 2N3904 MOT
90	Q508	086X0113-501	TRSTR 2N3904 MOT
91	Q509	086X0114-501	TRSTR 2N3904 MOT
92	Q510	086X0114-501	TRSTR 2N3904 MOT
93	Q511	086X0114-501	TRSTR 2N3904 MOT
94	R500	340X4033-633	RES 3.3 OHM 5% 1W MO/MF
95	R501	340X2242-934	RES 2.4K OHM 5% 1/4W CF
96	R502	340X2242-934	RES 2.4K OHM 5% 1/4W CF
97	R503	340X2242-934	RES 2.4K OHM 5% 1/4W CF
98	R504	340X2112-934	RES 1.1K OHM 5% 1/4W CF
99	R505	340X2112-934	RES 1.1K OHM 5% 1/4W CF
100	R506	340X2112-934	RES 1.1K OHM 5% 1/4W CF
101	R507	340X2103-934	RES 10K OHM 5% 1/4W CF
102	R508	340X2103-934	RES 10K OHM 5% 1/4W CF
103	R509	340X2103-934	RES 10K OHM 5% 1/4W CF
104	R510	340X4300-934	RES 30 OHM 5% 1W CF
105	R511	340X2113-934	RES 11.0K OHM 5% 1/4W CF
106	R512	340X2302-934	RES 3.0K OHM 5% 1/4W CF
107	R513	340X2910-934	RES 91K OHM 5% 1/4W CF
108	R514	340X2103-934	RES 10K OHM 5% 1/4W CF
109	R515	340X2102-934	RES 1.0K OHM 5% 1/4W CF
110	R516	340X2103-934	RES 10K OHM 5% 1/4W CF
111	R517	340X2103-934	RES 10K OHM 5% 1/4W CF
113	R518	340X2751-934	RES 750 OHM 5% 1/4W CF
113	R519	340X2181-934	RES 180 OHM 5% 1/4W CF
114	R520	340X2560-934	RES 56 OHM 5% 1/4W CF
115	R522	340X2560-934	RES 56 OHM 5% 1/4W CF
116	R524	340X2101-934	RES 100 OHM 5% 1/4W CF
117	R528	420X8272-326	RES 2.7K OHM 5% 5W MO
118	R529	420X8272-326	RES 2.7K OHM 5% 5W MO
119	R530	420X8272-326	RES 2.7K OHM 5% 5W MO
120	R531	340X2220-934	RES 22 OHM 5% 1/4W CF
121	R532	340X2220-934	RES 22 OHM 5% 1/4W CF
122	R533	340X2220-934	RES 22 OHM 5% 1/4W CF
123	R537	340X2560-934	RES 56 OHM 5% 1/4W CF
124	R538	340X2560-934	RES 56 OHM 5% 1/4W CF
125	R539	340X2560-934	RES 56 OHM 5% 1/4W CF
126	R540	340X2390-934	RES 39 OHM 5% 1/4W CF
127	R541	340X2390-934	RES 39 OHM 5% 1/4W CF
128	R542	340X2390-934	RES 39 OHM 5% 1/4W CF
129	R543	040X0653-008	TRIM POT 1K OHM 20% 0.5W
130	R544	040X0653-008	TRIM POT 1K OHM 20% 0.5W
131	R545	040X0653-008	TRIM POT 1K OHM 20% 0.5W
132	R546	340X3151-234	RES 150 OHM 5% 1/2W CC
133	R547	340X3102-234	RES 1.0K OHM 5% 1/2W CC
134	R548	320X2000-000	WIRE #20 BARE SOLID
135	R549	340X3151-234	RES 150 OHM 5% 1/2W CC
136	R550	340X3151-234	RES 150 OHM 5% 1/2W CC
137	R551	340X3151-234	RES 150 OHM 5% 1/2W CC
138	R552	340X2391-934	RES 390 OHM 5% 1/4W CC
139	R553	340X2391-934	RES 390 OHM 5% 1/4W CC
140	R554	340X2391-934	RES 390 OHM 5% 1/4W CC
141	R555	340X2391-934	RES 390 OHM 5% 1/4W CC
142	R556	086X0113-501	TRSTR NPN SANYO 2SC3782
143	R557	086X0113-501	TRSTR NPN SANYO 2SC3782
144	R558	086X0113-501	TRSTR NPN SANYO 2SC3782
145	R559	086X0113-501	TRSTR NPN SANYO 2SC3782
146	R560	086X0113-501	TRSTR NPN SANYO 2SC3782
147	R561	086X0113-501	TRSTR NPN SANYO 2SC3782
148	R562	086X0113-501	TRSTR NPN SANYO 2SC3782
158		038A7357-000	ASSEMBLY: HEAT SINK; U601
159		038A7432-000	ASSEMBLY: HEAT SINK; U601

DEFLECTION BOARD ASSEMBLY
025A1426-001
P738

160		038A7432-000	ASSEMBLY: HEAT SINK; U601
161		001X0711-001	INSUL SIL-PAD; Q710
162		001X0772-001	INSUL SIL-PAD; Q101
163		001X0776-001	INSUL SIL-PAD; Q704
164		001X0772-001	INSUL SIL-PAD; D707
165		001X0810-001	MOUNTING CLIP FOR Q101
166		001X0810-001	MOUNTING CLIP D707
167		002X0591-001	WASHER SHOULDER Q710
168		016X0209-001	FUSE CLIPS PCB 5x20mm (2)
169		080X0099-685	NUT KEPS 4-40; Q704
170		080X0099-232	NUT KEPS 4-40; Q710
171		080X0099-111	NUT KEPS 4-40; U601
172		046X0561-002	NUT KEPS 4-40; Q101
173		045X0580-031	NUT KEPS 4-40; D707
174		046X0544-004	PCB BOARD
175		045X0580-027	SCR MACH 4-40x1/4HH; U601
176		047X0789-510	SCR SWG #4-40x3/8HH; Q710
177		080X0099-505	SCR MACH #4-40x1/2HWH;
Q101			
178		312X0605-208	SCR SWG #4-40 x 1/2 HWH:
Q704			
179		312X1205-206	SCR SWG #6-32 x 3/8 HWH: PCB
180	C101	046X0552-002	CAP 0.47uF 250V UL/CSA/VDE
181	C102	046X0547-002	CAP 2200pF 400V UL/CSA/VDE
182	C103	046X0547-002	CAP 2200pF 400V UL/CSA/VDE
183	C104	046X0547-001	CAP 0.22uF 250V UL/CSA/VDE
184	C105	045X0603-003	CAP LYT 270uF 20% 400V 105 C
185	C106	080X0099-221	CAP 0.01uF 10% Y5P 500V CER
186	C107	045X0580-034	CAP LYT 33uF 20% 160V 105 C
187	C108	080X0099-221	CAP 0.01uF 10% Y5P 500V CER
188	C109	080X0099-698	CAP 0.01uF 10% Y5P 500V CER
189	C110	080X0099-685	CAP 0.01uF 10% Y5P 500V CER
190	C111	080X0099-232	CAP 0.01uF 10% Y5P 500V CER
191	C112	080X0099-111	CAP 0.01uF 10% Y5P 500V CER
192	C114	046X0561-002	CAP 0.01uF 10% Y5P 500V CER
193	C115	045X0580-031	CAP 0.01uF 10% Y5P 500V CER
194	C116	046X0544-004	CAP 0.01uF 10% Y5P 500V CER
195	C117	045X0580-027	CAP 0.01uF 10% Y5P 500V CER
196	C118	047X0789-510	CAP 0.01uF 10% Y5P 500V CER
197	C301	080X0099-505	CAP 0.01uF 10% Y5P 500V CER
198	C302	080X0099-505	CAP 0.01uF 10% Y5P 500V CER
199	C303	080X0099-505	CAP 0.01uF 10% Y5P 500V CER
200	C304	045X0560-051	CAP LYT 1000uF 20% 25V
201	C305	045X0560-051	CAP LYT 1000uF 20% 25V
202	C310	045X0560-051	CAP LYT 1000uF 20% 25V
203	C600	045X0560-051	CAP LYT 1000uF 20% 25V
204	C601	047X0560-051	CAP LYT 1000uF 20% 25V
205	C602	045X0560-518	CAP LYT 10uF 25V
206	C603	047X0789-501	CAP 0.10uF 5% 100V SMF
207	C604	047X0789-501	CAP 0.10uF 5% 100V SMF
208	C605	045X0560-504	CAP LYT 100uF 35V
209	C606	047X0789-501	CAP 0.10uF 5% 100V SMF
210	C607	045X0560-030	CAP LYT 470uF 35V
211	C608	047X0789-501	CAP 0.10uF 5% 100V SMF
212	C609	047X0786-517	CAP 0.047uF 10% 100V P-ESTER
213	C611	047X0786-502	CAP 0.022uF 10% 50V P-ESTER
214	C610	045X0560-522	CAP LYT 2.2uF 50V
215	C612	047X0786-508	CAP 0.033uF 10% 50V P-ESTER
216	C613	045X0560-504	CAP LYT 100uF 35V
217	C614	047X0789-504	CAP 0.22uF 5% 50V SMF
218	C615	045X0560-531	CAP LYT 33uF 16V
219	C616	045X0580-038	CAP LYT 1000uF 50V 105 C
220	C617	047X0788-512	CAP 0.1uF 20% Z5U 50V MON
221	C620	080X0099-685	CAP 1000pF 10% Y5P 50V CER
222	C700	045X0560-515	CAP LYT 220uF 16V

WELLS-GARDNER
ELECTRONICS CORPORATION

ISO 9001 REGISTERED QUALITY
certificate № 0104

DEFLECTION BOARD ASSEMBLY
025A1426-001
P738

223	C701	045X0560-518	CAP LYT 10uF 25V
224	C702	080X0099-710	CAP 100pF 10% Z5F 50V CER
225	C703	047X0788-502	CAP 1500pF 5% NPO 50V MON
226	C704	047X0788-505	CAP 270pF 10% NPO 50V MON
227	C705	045X0550-502	CAP 5600pF 50V POLY FILM
228	C706	045X0560-544	CAP LYT 1.0uF 50V
229	C707	047X0788-515	CAP 0.01uF 20% Z5U 50V MON
230	C708	046X0550-502	CAP 5600pF 2% 50V POLY FILM
231	C709	045X0560-544	CAP LYT 1.0uF 50V
232	C710	047X0786-501	CAP 0.01uF 10% 50V P-ESTER
233	C711	047X0789-501	CAP 0.10uF 5% 100V SMF
234	C712	045X0560-006	CAP LYT 1000uF 16V
235	C713	045X0560-501	CAP LYT 4.7uF 25V
236	C714	080X0099-722	CAP 3300pF 10% Y5P 500V CER
237	C715	080X0099-580	CAP 100pF 120% Z5F 500V CER
238	C716	045X0560-549	CAP LYT 1.0uF 20% 200V
239	C718	046X0536-065	CAP 680uF 1600V 2% P-PROP
240	C719	046X0536-021	CAP 0.27uF 200V 5% P-PROP
241	C720	046X0536-064	CAP 1000pF 630V 10% P-PROP
242	C721	046X0536-021	CAP 0.27uF 200V 5% P-PROP
243	C722	046X0537-006	CAP 0.47uF 200V 5% P-PROP
244	C723	046X0536-044	CAP 6000uF 1600V 2% P-PROP
245	C724	046X0536-012	CAP 0.015uF 400V 5% P-PROP
246	C725	045X0580-533	CAP LYT 100uF 20% 50V 105C
247	C726	047X0788-505	CAP 270pF 10% NPO 50V MON
248	C727	047X0786-519	CAP 2200pF 5% 50V P-ESTER
249	C728	047X0786-511	CAP 0.1uF 10% 50V P-ESTER
250	C729	045X0580-535	CAP LYT 220uF 20% 50V 105 C
251	C730	045X0560-501	CAP LYT 4.7uF 25V
252	C731	045X0560-518	CAP LYT 10uF 25V
253	C732	045X0560-518	CAP LYT 10uF 25V
254	C733	080X0099-697	CAP 120pF 5% NPO 50V CER
255	C800	080X0099-234	CAP 0.01uF 10% R 250V CER
256	C801	080X0099-234	CAP 0.1uF 10% R 250V CER
257	C802	047X0788-515	CAP 0.1uF 20% Z5U 50V MON
258	C803	080X0099-062	CAP 0.2uF +80-10% Z5U 500V
259	C804	080X0099-095	CAP 1000pF 10% Z5F 2KV CER
260	C805	045X0560-550	CAP LYT 2.2uF 20% 200V
261	C808	045X0560-550	CAP LYT 2.2uF 20% 200V
262	C810	045X0560-555	CAP LYT 10uF 20% 63V
263	CN101	006A0475-003	HEADER 3 PIN
264	CN102	006A0427-001	PLUG HEADER 2 PIN
265	CN15K	006A0403-011	HEADER 11 PIN 0.156 CTR
266	CN25K	006A0403-011	HEADER 11 PIN 0.156 CTR
267	CN200	006A0403-010	HEADER 10 PIN 0.156 CTR
268	CN201	006A0473-013	HEADER 13 PIN 0.100 CTR
269	CN203	006A0473-010	HEADER 17 PIN 0.100 CTR
270	CN206	006A0427-001	PLUG HEADER 2 PIN
271	CN207	006A0427-002	HEADER 2 PIN
272	D101	066X0135-001	DIODE 1N5406
273	D102	066X0135-001	DIODE 1N5406
274	D103	006A0427-001	PLUG HEADER 2 PIN
275	D104	006A0427-001	PLUG HEADER 2 PIN
276	D105	006X0095-001	DIODE 1N4007 STATIC SENS
277	D106A	006X0097-001	DIODE 200V 3.5A BYV28-200
278	D106B	006X0097-001	DIODE 200V 3.5A BYV28-200
279	D106C	006X0097-001	DIODE 200V 3.5A BYV28-200
280	D107	066X0126-002	DIODE MUR490
281	D108	066X0090-001	DIODE RU2 1A 600V FAST REC
282	D109	066X0071-001	DIODE 1N4001
283	D110	066X0071-001	DIODE 1N4001
284	D111	066X0071-001	DIODE 1N4001
285	D112	066X0090-001	DIODE RU2 1A 600V FAST REC
286	D113	066X0090-001	DIODE RU2 1A 600V FAST REC
287	D114	066X0071-001	DIODE 1N4001

DEFLECTION BOARD ASSEMBLY
025A1426-001
P738

288	D117	066X0144-001	DIODE 1A 600V GI RGP10J
289	D301	066X0090-001	DIODE RU2 1A 600V FAST REC
290	D302	066X0090-001	DIODE RU2 1A 600V FAST REC
291	D303	066X0090-001	DIODE RU2 1A 600V FAST REC
292	D310	066X0090-001	DIODE RU2 1A 600V FAST REC
293	D600	066X0090-001	DIODE 1N914B
294	D601	066X0090-001	DIODE 1N914B
295	D602	066X0090-001	DIODE 1N914B
296	D603	066X0090-001	DIODE 1N4001
297	D604	066X0090-001	DIODE 1N914B
298	D700	066X0090-001	DIODE 1N914B
299	D702	066X0070-001	DIODE 1N914B
300	D707	066X0143-001	DIODE DD202
301	D708	066X0126-005	DIODE 900V 4A MUR490E
302	D709	066X0070-001	DIODE 1N914B
303	D710	066X0070-001	DIODE 1N914B
304	D711	066X0070-001	DIODE 1N914B
305	D712	066X0070-001	DIODE 1N914B
306	D713	066X0070-001	DIODE 1N914B
307	D716	066X0126-005	DIODE 200V 3.5A BYV28-200
308	D800	066X0070-001	DIODE 1N914B
309	D802	066X0062-001	DIODE SANYO GMA02
310	D803	066X0062-001	DIODE SANYO GMA02
311	D804	066X0070-001	DIODE 1N914B
312	D805	066X0070-001	DIODE 1N914B
313	D806	066X0070-001	DIODE 1N914B
314	D807	066X0070-001	DIODE SANYO GMA02
315	F101	016X0208-001	FUSE 3A FAST BLOW 250V
316	L101	052X0147-001	CHOKE COM MODE INPUT
317	L102	038A7494-000	ASSEMBLY: FERRITE BEAD
318	L103	009A2983-001	CHOKE TOROID 23uH 3A
319	L104	009A2811-004	COIL 12uH
320	L105	009A2811-002	COIL 22uH
321	L701	009A2976-002	COIL LINEARITY CTR TAPPED
322	L703	009A2970-002	COIL PINCUSHION
323	L704	009A2811-012	COIL PEAKING 0.82uH
324	P15/25K	038A7508-000	FREQ CHANGE PLUG ASSY
325	Q101	086X0334-001	FET N CHANNEL SSP6N60
326	Q601	086X0113-501	TRSTR 2N3904 MOT
327	Q602	086X0113-501	TRSTR 2N3904 MOT
328	Q700	086X0113-501	TRSTR 2N3904 MOT
329	Q703	086X0185-501	TRSTR 2SC2482 TOSH
330	Q704	086X0286-001	TRSTR 2SC3686 SANYO
331	Q705	086X0114-501	TRSTR 2N3906 MOT
332	Q708	086X0185-501	TRSTR 2SC2482 TOSH
333	Q709	086X0211-501	TRSTR 2N4403 STATIC SENS
334	Q710	086X0335-001	TRSTR BDX53A SGS NPN DAR
335	Q800	086X0133-501	TRSTR MPSA92 MOT
336	Q801	086X0113-501	TRSTR 2N3904 NPN
337	Q808	086X0113-501	TRSTR 2N3904 MOT
338	R100	340X8047-631	THERM NTC 10 OHM
339	R101	043X0493-001	RES 68K OHM 5% 1W
340	R102	420X4683-313	RES 68K OHM 5% 1W
341	R103	420X4683-313	RES 68K OHM 5% 1W
342	R104	043X0484-006	RES 10K OHM 5% 7W
343	R105	340X6471-631	RES 470 OHM 5% 3W MO/MF
344	R106	340X2102-934	RES 1.0K OHM 5% 1/4W CF
345	R107	340X2100-934	RES 10 OHM 5% 1/4W CF
346	R108	420X5209-323	RES 0.22 OHM 5% 2W
347	R110	421X1822-221	RES 18.2K OHM 1% 1/4W MF
348	R111	340X4471-631	RES 470 OHM 5% 1W MO/MF
349	R112	340X2561-934	RES 560M OHM 5% 1/4W CF
350	R113	421X2001-221	RES 2.00K OHM 1% 1/4W MF
351	R114	340X2102-934	RES 10K OHM 10% 1/4W CF
352	R115	340X2292-934	RES 2.2K OHM 5% 1/4W CF

ISO 9001 REGISTERED QUALITY
certificate № 0104

DEFLECTION BOARD ASSEMBLY
025A1426-001
P738

353	R116	340X2102-934	RES 1.0K OHM 5% 1/4W CF
354	R117	340X2102-934	RES 1.0K OHM 10% 1/4W CF
355	R120	340X5683-531	RES 68K OHM 5% 2W CF
356	R121	043X0510-001	THERM PTC 8 OHM 120V
357	R122	340X5106-531	RES 10M OHM 10% 2W CF
358	R123	340X5105-531	RES 1M OHM 10% 2W CF
359	R124	340X2101-934	RES 100 OHM 5% 1/4W CF
360	R301	043X0486-002	RES 1.2 OHM 5% 2W MF
361	R303	043X0486-002	RES 1.2 OHM 5% 2W MF
362	R305	340X3122-934	RES 1.2K OHM 5% 1/2W CF
363	R310	934X0486-002	RES 1.2K OHM 5% 2W MF
364	R600	340X2101-934	RES 100K OHM 5% 1/4W CF
365	R601	340X2473-934	RES 47K OHM 5% 1/4W CF
366	R602	340X2223-934	RES 22K OHM 5% 1/4W CF
367	R603	340X2681-934	RES 680K OHM 5% 1/4W CF
368	R604	340X2479-934	RES 4.7K OHM 5% 1/4W CF
369	R605	340X2101-934	RES 1.0K OHM 5% 1/4W CF
370	R606	340X2101-934	RES 1.0K OHM 5% 1/4W CF
371	R607	340X2432-934	RES 4.3K OHM 5% 1/4W CF
372	R608	340X2102-934	RES 1K OHM 5% 1/4W CF
373	R609	340X2103-934	RES 10K OHM 5% 1/4W CF
374	R610	340X2103-934	RES 10K OHM 5% 1/4W CF
375	R611	340X2154-934	RES 150K OHM 5% 1/4W CF
376	R612	340X2153-934	RES 15K OHM 5% 1/4W CF
377	R613	340X2022-934	RES 2.2K OHM 5% 1/4W CF
378	R614	340X2242-934	RES 2.4K OHM 5% 1/4W CF
379	R615	340X2273-934	RES 27K OHM 5% 1/4W CF
380	R616	340X2911-934	RES 910K OHM 5% 1/4W CF
381	R617	340X3821-934	RES 820K OHM 5% 1/2W CF
382	R618	340X3829-934	RES 82 OHM 5% 1/2W CF
383	R619	340X4820-633	RES 82 OHM 5% 1W MO/MF
384	R620	340X4681-531	RES 680 OHM 5% 1W CF
385	R621	340X2272-934	RES 2.7 OHM 5% 1/4W CF
386	R622	340X2105-934	RES 1M OHM 5% 1/4W CF
387	R623	340X2472-934	RES 470K OHM 5% 1/4W CF
388	R624	340X2184-934	RES 180K OHM 5% 1/4W CF
389	R625	340X3271-934	RES 270 OHM 5% 1/2W CF
390	R626	340X2683-934	RES 68K OHM 5% 1/4W CF
391	R627	340X2623-934	RES 62K OHM 5% 1/4W CF
392	R628	340X2103-934	RES 10K OHM 5% 1/4W CF
393	R700	340X2102-934	RES 1K OHM 5% 1/4W CF
394	R701	340X2103-934	RES 10K OHM 5% 1/4W CF
395	R702	340X2223-934	RES 22K OHM 5% 1/4W CF
396	R703	340X2301-934	RES 300K OHM 5% 1/4W CF
397	R704	340X2472-934	RES 4.7K OHM 5% 1/4W CF
398	R705	340X2471-934	RES 470K OHM 5% 1/4W CF
399	R707	340X2102-934	RES 1K OHM 5% 1/4W CF
400	R709	340X2223-934	RES 22K OHM 5% 1/4W CF
401	R710	340X2103-934	RES 10K OHM 5% 1/4W CF
402	R711	340X2123-934	RES 12K OHM 5% 1/4W CF
403	R712	340X2103-934	RES 10K OHM 5% 1/4W CF
404	R713	340X2102-934	RES 1K OHM 5% 1/4W CF
405	R714	340X2223-934	RES 33K OHM 5% 1/4W CF
406	R715	340X2102-934	RES 1.0K OHM 5% 1/4W CF
407	R716	421X8661-221	RES 8.66K OHM 1% 1/4W CF
408	R717	340X2822-934	RES 8.2K OHM 5% 1/4W CF
409	R718	340X2103-934	RES 10K OHM 5% 1/4W CF
410	R719	340X2912-934	RES 9.1K OHM 5% 1/4W CF
411	R720	340X3220-934	RES 22K OHM 5% 1/2W CF
412	R721	340X3393-234	RES 39K OHM 5% 1/2W CC
413	R722	340X2682-934	RES 6.8K OHM 5% 1/4W CF
414	R723	340X2222-934	RES 2.2K OHM 5% 1/4W CF
415	R724	340X2162-934	RES 1.6K OHM 5% 1/4W CF
416	R725	340X2101-934	RES 100K OHM 5% 1/4W CF
417	R726	340X2103-934	RES 10K OHM 5% 1/4W CF
418	R727	340X4392-631	RES 3.9K OHM 5% 1W MO/MF
419	R728	340X5102-731	RES 1.0K OHM 5% 2W MO/MF

DEFLECTION BOARD ASSEMBLY
025A1426-001
P738

420	R729	340X2101-934	RES 100K OHM 5% 1/4W CF
421	R732	340X4222-631	RES 2.2K OHM 5% 1/4W MO/MF
422	R734	340X2101-934	RES 1.0K OHM 5% 1/4W CF
423	R735	340X2102-934	RES 1.0K OHM 5% 1/4W CF
424	R736	340X2153-934	RES 15K OHM 5% 1/4W CF
425	R745	340X2182-934	RES 1.8K OHM 5% 1/4W CF
426	R750	340X2471-934	RES 470K OHM 5% 1/4W CF
427	R751	340X2682-934	RES 6.8K OHM 5% 1/4W CF
428	R752	340X2103-934	RES 10K OHM 5% 1/4W CF
429	R753	340X2333-934	RES 33K OHM 5% 1/4W CF
430	R754	340X2682-934	RES 6.8K OHM 5% 1/4W CF
431	R755	340X2103-934	RES 10K OHM 5% 1/4W CF
432	R756	340X2222-934	RES 2.2K OHM 5% 1/4W CF
433	R759	320X2000-000	WIRE #20 BARE SOLID
434	R760	043X0509-004	RES 100K OHM 5% 1/2W CF
435	R762	340X2330-934	RES 33K OHM 5% 1/4W CF
436	R763	340X2822-934	RES 8.2K OHM 5% 1/4W CF
437	R765	340X3333-934	RES 33K OHM 5% 1/2W CF
438	R800	320X2000-000	WIRE #20 BARE SOLID
439	R801	340X2821-934	RES 820 OHM 5% 1/4W CF
440	R802	340X2000-000	WIRE #20 BARE SOLID
441	R803	340X2103-934	RES 10K OHM 5% 1/4W CF
442	R804	340X2334-934	RES 330K OHM 5% 1/4W CF
443	R806	340X2471-934	RES 470K OHM 5% 1/4W CF
444	R809	340X3391-934	RES 390K OHM 5% 1/2W CF
445	R810	340X3202-934	RES 2K OHM 5% 1/4W CF
446	R811	340X3104-934	RES 100K OHM 5% 1/2W CF
447	R812	340X2202-934	RES 2.0K OHM 5% 1/4W CF
448	R813	340X2103-934	RES 10K OHM 5% 1/4W CF
449	R814	340X2302-934	RES 3.0K OHM 5% 1/4W CF
450	R815	340X2474-934	RES 470K OHM 5% 1/4W CF
451	R816	340X2204-934	RES 200K OHM 5% 1/4W CF
452	R817	340X2474-934	RES 470K OHM 5% 1/4W CF
453	R818	320X2000-000	WIRE #20 BARE SOLID
454	R819	340X2103-934	RES 10K OHM 5% 1/4W CF
455	R821	340X2102-934	RES 1.0K OHM 5% 1/4W CF
456	R823	340X5047-631	RES 4.7K OHM 5% 2W MF
457	R824	340X5043-631	RES 4.3 OHM 5% 2W
458	R825	340X3202-844	RES 2.0K OHM 5% 1/2W CC
459	R830	421X3572-221	RES 35.7K OHM 1% 1/4W
460	T101	053X0631-001	TFMR SMPS 140-340V 120KHZ
461	T700	053X0624-001	TFMR FLYBACK
462	T701	052X0131-001	TFMR HORIZ DRIVER
463	TP103	030X0798-001	PIN 1mm OSHIMA
464	TP104	030X0798-001	PIN 1mm OSHIMA
465	TP105	030X0798-001	PIN 1mm OSHIMA
466	TP106	030X0798-001	PIN 1mm OSHIMA
467	TP200	030X0798-001	PIN 1mm OSHIMA
468	TP201	030X0798-001	PIN 1mm OSHIMA
469	TP202	030X0798-001	PIN 1mm OSHIMA
470	TP203	030X0798-001	PIN 1mm OSHIMA
471	TP204	030X0798-001	PIN 1mm OSHIMA
472	TP205	030X0798-001	PIN 1mm OSHIMA
473	U101	086X0257-001	IC PWM UC3842AN
474	U601	086X0326-001	IC VERT DEFL TDA1771
475	U701	086X0274-001	IC LA7850 H/V PROC SANYO
476	U702	086X0333-001	IC QUAD XOR SN4LS136N
477	VR101	040X0639-014	TRIM POT 1K OHM 0.3W 20%
478	VR700	040X0639-008	TRIM POT 10K OHM 0.3W 20%
479	Z601	066X0040-046	MOT IM5242B DIODE
480	Z700	066X0040-028	ZENER DIODE 5.1V 5% 0.5W
481	Z701	066X0040-022	ZENER DIODE 5.6V 5% 0.5W
482	Z702	066X0040-017	ZENER DIODE 13V 1W
483	Z705	066X0040-020	ZENER DIODE 9.1V 5% 0.5W
484	Z800	421X3572-221	RES 35.7K OHM 1% 1/4W
485	Z802	066X0040-031	ZENER DIODE 24V 3% 0.5W

WELLS-GARDNER
ELECTRONICS CORPORATION

VIDEOSTAX

27V Monitors

STATE-OF-THE-ART PRESENTATION MONITORS

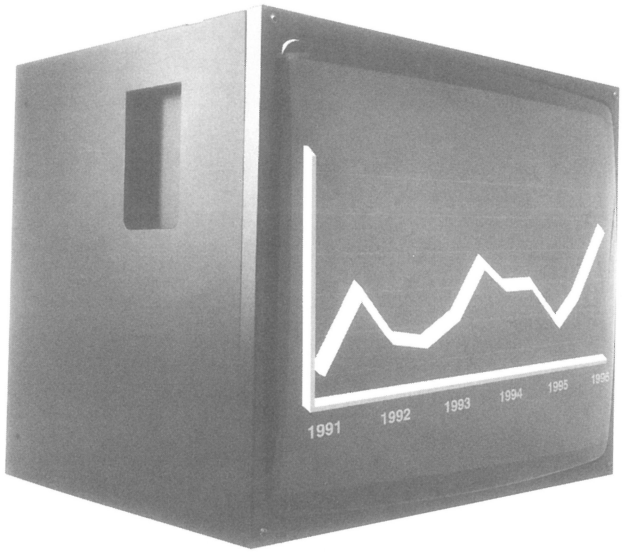

VIDEOSTAX™

Wells-Gardner is the largest producer of 27V monitors in North America. For retail mall displays, tradeshow applications, airports and information displays, nothing beats VideoStax from Wells-Gardner. Here's why:

PICTURE PERFECTION

- Stackable CRT video monitors
- Out-of-the-box color balance
- Easy setup and installation

DISPLAY FOR PUBLIC AREAS

- Airports
- Hotels
- Board Rooms
- Stock Market
- Made in the USA
- Train Stations
- Night Clubs
- Cafeterias
- Trade Shows
- Also designed for stacking
- Bus Stations
- Office Lobbies
- Banks
- Restaurants
- Auto 90-264 Vac. 50-70 Hz
- Vert. Sync. Freq. 60-70 Hz

OUTSTANDING CUSTOMER SUPPORT

- A 24-hour service hotline — 800-336-6630
- Unique "slide in and out" electronics
- Easy to service and maintain
- International service representation

ONE-YEAR LIMITED WARRANTY

- Largest producer of large screen data display monitors
- First video wall monitor manufacturer with ISI 9001 certification

AVAILABLE OPTIONS

- Up-front controls patent pending
- Anti-glare CRT's
- 33" and 25" CRT sizes

REGISTERED ISO 9001 QUALITY
certificate № 0104

THE IMAGE IS SO REAL, THE COLOR SO PERFECT, YOU'LL FEEL LIKE PART OF THE ACTION

WELLS-GARDNER
ELECTRONICS CORPORATION

VIDEOSTAX
PRESENTATION MONITORS

ISO 9001 REGISTERED QUALITY certificate № 0104

WG P/N: WGM2730-W2TS49F

DIMENSIONS SHOWN ARE FOR REFERENCE ONLY. FOR SPECIFICS CONTACT W.G.E.C. ENGINEERING.
2701 North Kildare Avenue Chicago, Illinois 60639 Phone (773) 252-8220 Fax (773) 252-8072

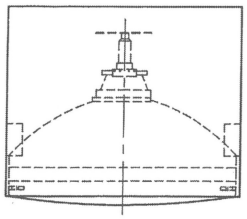

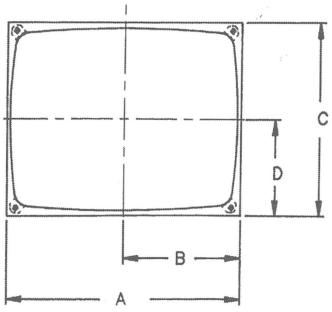

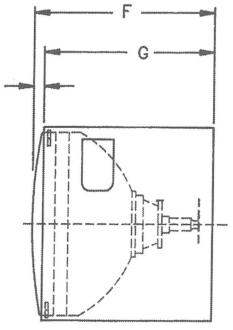

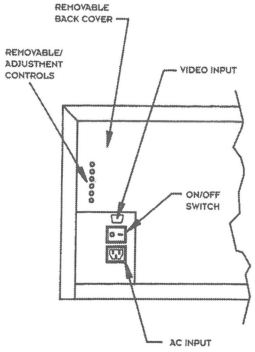

27V LARGE SCREEN VGA MONITOR 27-W2

DIM	A	B	C	D	E	F	G
IN	24.500	12,250	19.562	9.781	1.562	20.875	19.375
mm.	622.30	311.15	496.88	248.44	39.67	530.23	492.13

Dimensions shown are for reference purpose only. For specifics contact W.G.E.C. Engineering.

PRODUCT SPECIFICATIONS

SPECIFICATION
- CRT sizes (diagonal measure): 27"
- Phosphor type:P22
- CRT etch: Polished faceplate: Other faceplates available
- Striped trio spacing: 0.84mm (27")

INPUT SIGNALS
- Input connector: 15 pin D- sub male: VGA compatible
- Video type: RGB analog
- Video input impedance: 75Ohm; 470 Ohm optional
- Video level: 0.7 volts peak-to-peak; other levels optional
- Sync type: Standard VGA TTL sync; composite optional
- Sync input impedance: 4.7K Ohm
- Horizontal sync frequency :31.5 KHz
- Vertical sync frequency: 60 to 70 Hz

LIGHT OUTPUT
- 40 fL typical

GEOMETRY
- Horizontal linearity: ±7%
- Vertical linearity: ±5%
- Picture size regulation: 2%
- Geometric distortion: ±2% max.

POWER INPUT
- Input voltage: 90-204 VAC, 50-60 Hz; no isolation transformer required
- Maximum power: 160 watts

USER CONTROLS
- Remote controls: Brightness , contrast, horizontal size, horizontal centering, vertical size, vertical centering.
- Internal controls: Horizontal hold, vertical hold, vertical linearity, focus.

MECHANICAL
- See above dimensions

MISCELLANEOUS
- Operating temperature: 0 to 55 degree c
- Agency compliance: UL, CSA, DHHS radiation performance std., TUV.

RESOLUTION
- Graphics modes: 640 x 200, 640 x 350, 640 x 480
- Video bandwidth: 25 MHz typical.

Specifications are subject to change without notice.

VIDEOSTAX

ISO 9001
certificate № 0104

REPLACEMENT PARTS LIST

POWER SUPPLY BOARD ASSEMBLY Designation	Description	W/G Part No.
D101-D104	DIODE, 1N5406	066X0135-001
D106	DIODE, BYV28-200	066X0097-001
D107	DIODE, MUR490	066X0126-002
D118	DIODE, BYV28-200	066X0097-001
Q101	FET, SSP6N60	086X0334-001
U101	IC, UC3842AN REG.	086X0257-001

MISCELLANEOUS Designation	Description	W/G Part No.
–	29", CRT	088X0370-001
–	DEFLECTION BOARD ASSEMBLY	025A1442-001
–	POWER SUPPLY BOARD ASSEMBLY	025A1447-001
–	VIDEO BOARD ASSEMBLY	025A1354-001
–	REMOTE CONTROL BOARD ASSEMBLY	025A1425-001

DEFLECTION BOARD ASSEMBLY Designation	Description	W/G Part No.
D602	DIODE, 1N4001	066X0071-001
D603	DIODE, RL202	066X0147-001
D704	DIODE, DD20R	066X0143-001
D705	DIODE, MUR490	066X0126-002
F101	FUSE, 3.15A, 5 X 20 MM	016X0210-009
Q500, Q502, Q504	TRANSISTOR, 2SC3950	086X0290-001
Q501, Q503, Q505	TRANSISTOR, 2SC3782	086X0287-001
Q601	TRANSISTOR, 2SD525R	086X0074-001
Q602	TRANSISTOR, 2SB595R	086X0075-001
Q701	TRANSISTOR, 2SC3688	068X0321-001
U200	IC, LM1203 VIDEO	086X0270-001
U300	IC, 74LS156 DEMULT.	086X0295-001
U302	IC, 74LS86 EXL-OR	086X0313-001
U303	IC, 74LS123 DUAL-MONO	086X0338-001
U600	IC, TDA1175 VERT.	086X0347-001
U700	IC, LA7850 HORZ.	086X0274-001

WELLS-GARDNER
ELECTRONICS CORPORATION

VIDEOSTAX

State-of-the-Art Wall Monitors

ISO 9001
certificate № 0104

STATE-OF-THE-ART VIDEO WALL MONITORS

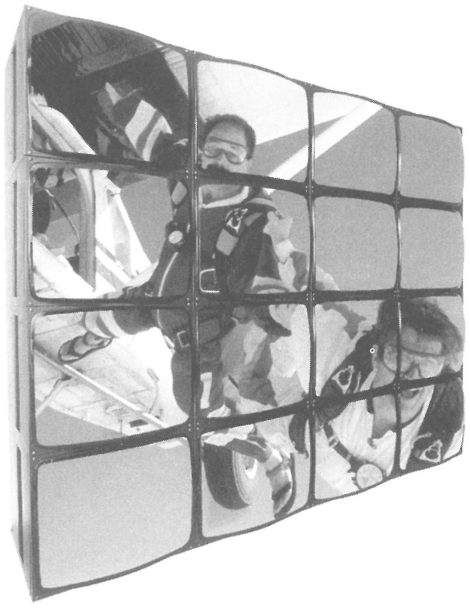

VIDEOSTAX™

Wells-Gardner is the largest producer of 25V and 27V monitors in North America. For retail mall displays, tradeshow applications, airports and information displays, nothing beats VideoStax from Wells-Gardner. Here's why:

- PICTURE PERFECTION
  - Stackable CRT video monitors
  - Out-of-the-box color balance
  - Easy setup and installation
- RELIABLE COLOR BALANCE
  - Standard color consistency
  - Monitor-to-monitor color matching
  - Optional front mounted controls makes for faster and easier set-up
  - Smallest mullion distance
  - Automatic 90 to 264 VAC power supply for operation anywhere in the world
- OUTSTANDING CUSTOMER SUPPORT
  - A 24-hour service hotline—800-336-6630
  - Unique "slide in and out" electronics
  - Easy to service and maintain
  - International service representation
- TWO-YEAR WARRANTY
  - Largest producer of large screen data display monitors
  - First video wall monitor manufacturer with ISO 9001 certification
  - Warranty is double the industry standard
- AVAILABLE OPTIONS
  - Up-front controls patent pending
  - NTSC with Priority Switching
  - Anti Glare
- The Image is so real, the color so perfect, you'll feel like part of the action.

WELLS-GARDNER
ELECTRONICS CORPORATION

VIDEOSTAX
VIDEO WALL MONITORS

ISO 9001 REGISTERED QUALITY certificate № 0104

2701 North Kildare Avenue Chicago, Illinois 60639 Phone (773) 252-8220 Fax (773) 252-8072

VIDEOSTAX

25V RGB & NTSC Front Access Control Monitor
WG P/N: WGM2574-W4TS51H

25V RGB & NTSC Rear Access Control Monitor
WG P/N: WGM2574-W0TS46G

27V RGB & NTSC Front Access Control Monitor
WG P/N: WGM2774-W5TS52H

27V RGB & NTSC Rear Access Control Monitor
WG P/N: WGM2774-W1TS47G

	25V	27V
FLAT SQUARE	NO	YES
DOT PITCH	.84MM	.84.MM
BLACK MATRIX	YES	YES
DEFLECTION ANGLE	110°	110°
Weight	86 LB.	106 LB.
Shipping	92 LB.	112 LB.
Mullion Distance	2 .5 (63.51)	2.125 (53.98)

UNIT = INCHES (MM)

HORIZONTAL FREQUENCY	15.75 KHz + 100Hz.
VIDEO INPUTS	RGB ANALOG. 0.7 Vp-p. 75 Ohm INPUT
BANDWIDTH	12 MHz.
VERTICAL FREQUENCY	47 TO 63 Hz.
COLOR TEMPERATURE	8500 K. (Other temperatures Optional)
POWER SUPPLY	90 to 264 VAC, 50/60 Hz, AUTOMATIC SWITCHING
POWER CONSUMPTION	LESS THAN 125 WATTS.
POWER CONNECTIONS	MALE INPUT PLUG.
OPERATING TEMPERATURE	O°C TO 50 C.
SWITCHES	AC ON/OFF.
AGENCY COMPLIANCE	UL, CSA, DHHS, FCC CLASS A.
ANTI-GLARE	OPTIONAL

VIDEO CONNECTORS Subminiature DB 9pin (F)

PINOUT

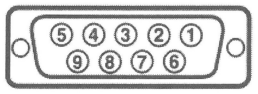

PIN	FUNCTION
1	RED input (0.7 Vp-p)
2	GREEN INPUT (0.7 Vp-p)
3	BLUE INPUT (0.7 Vp-p)
4	GROUND
5	GROUNDCOMP.. NEG. SYNC.
6	COMP. NEG. SYNC. (0.5 to 1.0 Vp-p)
7	N/C
8	N/C
9	N/C

WELLS-GARDNER
ELECTRONICS CORPORATION

VIDEOSTAX
VIDEO WALL MONITORS

ISO 9001 REGISTERED QUALITY certificate № 0104

DIMENSIONS SHOWN ARE FOR REFERENCE ONLY. FOR SPECIFICS CONTACT W.G.E.C. ENGINEERING.
2701 North Kildare Avenue Chicago, Illinois 60639 Phone (773) 252-8220 Fax (773) 252-8072

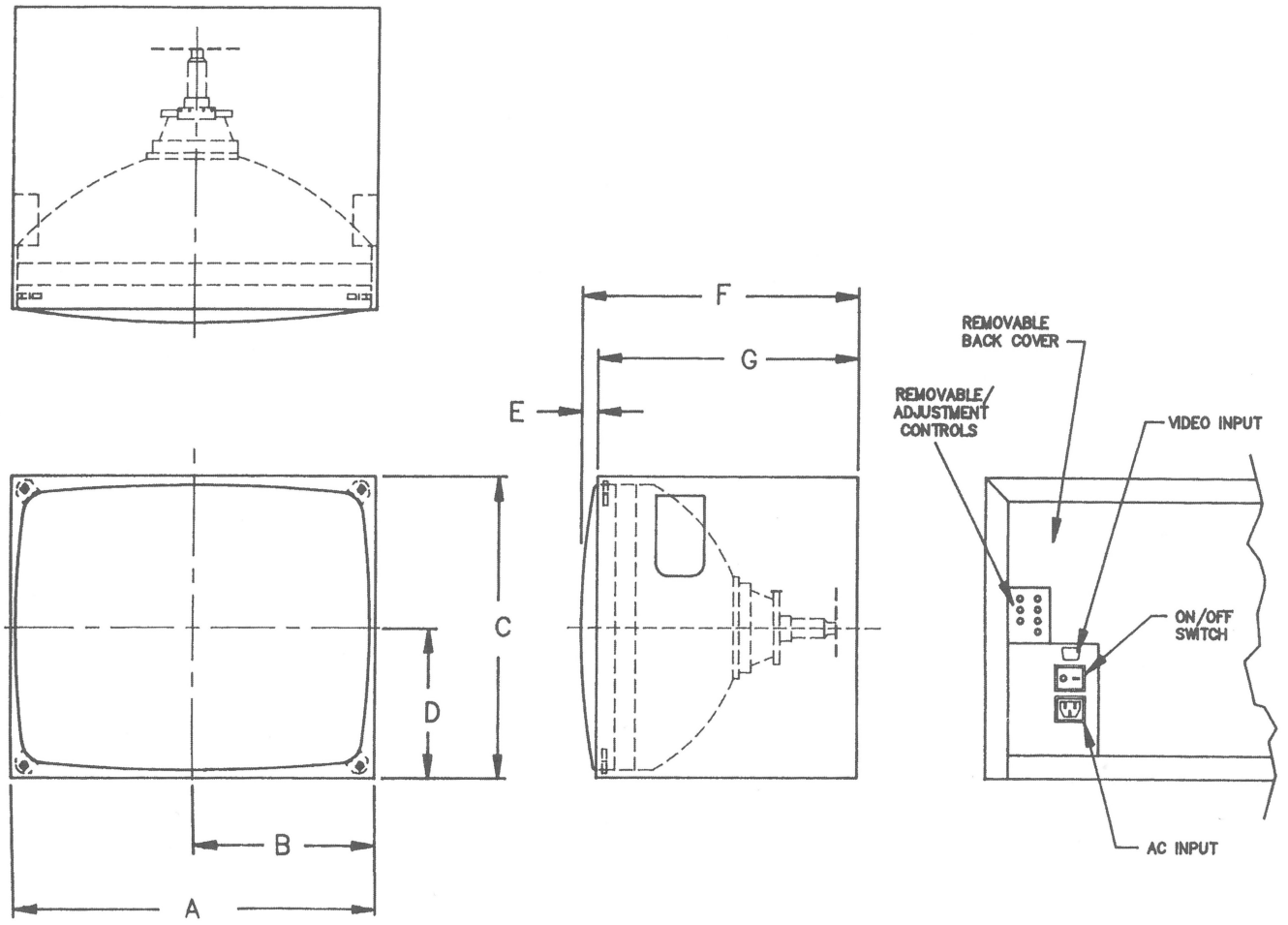

25V VideoStax Color Monitor 25-W0

DIM.	A	B	C	D	E	F	G
IN.	23.000	11.500	17.625	8.812	2.125	21.625	19.500
mm.	584.20	292.10	447.68	223.83	53.98	549.28	495.30

27V VideoStax Color Monitor 27-W1

DIM.	A	B	C	D	E	F	G
IN.	23.718	11.859	18.657	9.328	2.343	21.468	19.125
mm.	602.44	301.20	473.89	236.93	59.51	545.29	485.78

WELLS-GARDNER
ELECTRONICS CORPORATION

V I D E O S T A X

VIDEO WALL MONITORS

ISO 9001 REGISTERED QUALITY certificate № 0104

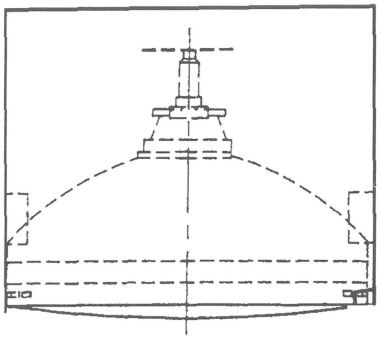

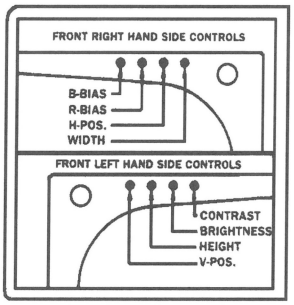

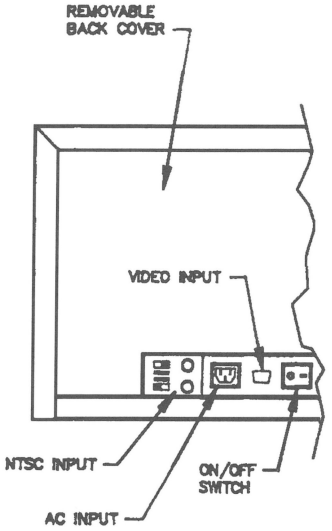

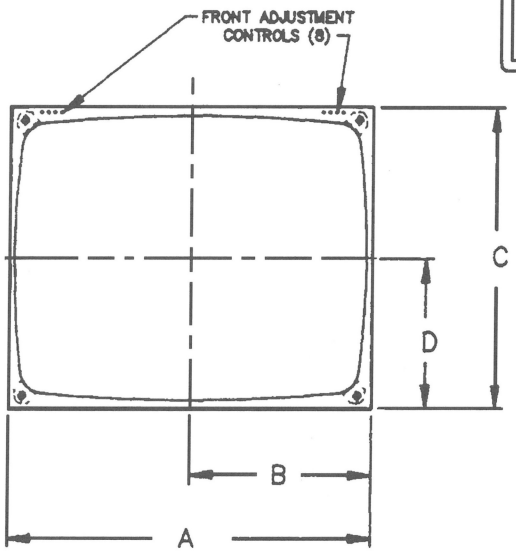

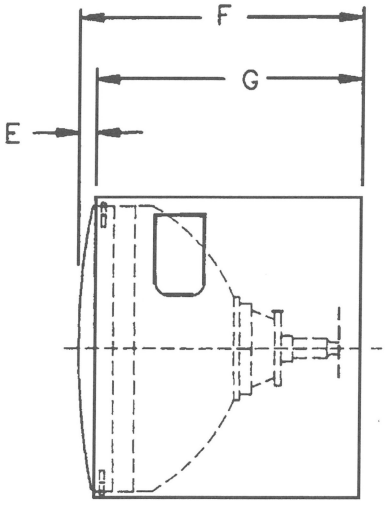

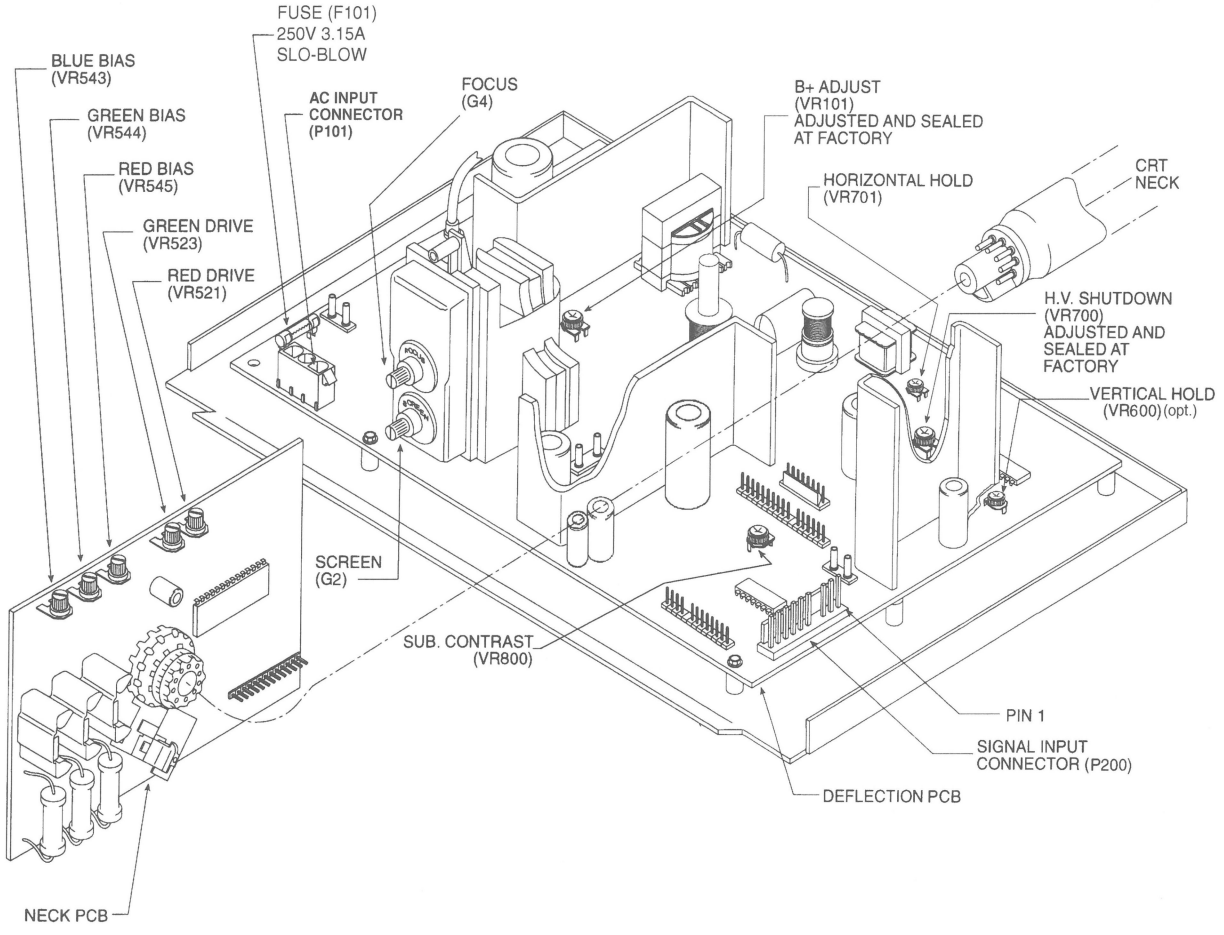

SWITCH SETTINGS

Priority Selection Switch (upper slide switch): This switch selects which of two simultaneous input signals, RGB via the DB-9 connector and NISC via a BNC connector, will be displayed. If only one of these signals is present at a given time, then it will be displayed regardless of the switch position.

75 OEDM Termination Switch (lower slide switch): This switch adds or removes the 75 ohm impedance termination for the NTSC signal on a BNC input connector. If the monitor is being used by itself or is at the end a looped-through string of monitors, then the switch should be in the ' 75" position. If the monitor is on a string of looped-through monitors but is not at the end of the string, then this switch should be in the "HI-Z" position.

NTSC BOARD ADJUSTMENT INSTRUCTIONS

The controls on the NTSC board will affect the display only when the monitor is displaying video which is coming in via the BNC connectors. It will not affect the display of video (ROB) coming in via the DB-9 connector. The other controls on the monitor will affect the display of video from both sources. Therefore, if any adjustment is desired, first adjust the monitor controls on the NTSC board while viewing a display from a composite video source via the BNC connectors.

BRT: Use this control to make the entire display brighter or darker.

CONT: Use this control to increase or decrease the picture intensity. This will affect the brighter images of the display with minimal effect on the dimmer images.

SAT: Use this control to increase or decrease the color intensity.

HUE:: Use this control to adjust the relative amounts of the various colors in the display (i.e. to adjust the flesh tones).

PARTS

CRT CROSS REFERENCE ALT. P/N

MODEL	DESCRIPTION	CRT WG P/N	MFR P/N	ALT CRT	MFR P/N
WGM1370-H9TS10C	13" K7000 CGA HORIZ	088X0399-001	A34JLL40X23 ORION 13"		
WGM1370-H0GS53G	13" K7000 CGA HORIZ ORION	088X0362-001	A34LJLL40X25 13"	088X0236-506	A34JLL00X VID DISPL 13"
WGM1370-H0GS64E	13" K7000 CGA HORIZ ORION	088X0362-001	A34LJLL40X25 13"	088X0236-506	A34JLL00X VID DISPL 13"
WGM1370-H0TS27D	13" K7000 CGA FRONT CTRL	088X0399-001	A34JLL90X23 13"ORION		
WGM1370-H0TS31G	13" K7000 CGA HORIZ ORION	088X0236-001	A34JLL40X25 13"ORION		
WGM1370-M1TS41D	13" K7000 CGA HORIZ"	088X0330-001	M34JRW23X09 13" ORION		
WGM1370-M1TS48D	13" K7000 CGA HORIZ"	088X0236-001	A34JLL40X25 13" ORION		
WGM1370-M3TS18F	13" K7000 CGA HORIZ W/SMPS P715	088X0236-001	A34JLL40X25 13" ORION		
WGM1370-M2TS13J	13" K7000 CGA HORIZ	088X0236-001	A34JLL40X25 13" ORION		
WGM1370-H0TS27C	13" K7000 CGA HORIZ ORION	088X0362-001	A34LJLL40X25 13"	088X0236-506	A34JLL00X VID DISPL 13"
WGM1371-K0TM13C	13" K7000 CGA KIT W/.7V VIDEO	088X0399-001	A34JLL90X23 13" ORION		
WGM1372-H0GS26G	13" K7200 CGA HORIZ W/SMPS	088X0362-001	A34LJLL40X25 13"		
WGM1372-H0TS37G	13" K7200 CGA HORIZ W/SMPS	088X0236-001	A34JLL40X25 13" ORION		
WGM1372-H0TS77G	13" K7200 CGA W/2 PIN PWR CONN	088X0399-001	A34JLL40X23 ORION 13"		
WGM1372-H0TS27G	13" K7200 CGA HORIZ W/SMPS	088X0399-001	A34JLL40X23 ORION 13"		
WGM1372-K0TM10G	RS 13" K7200 CGA KIT W/SMPS	088X0399-001	A34JLL40X23 ORION 13"		
WGM1372-K0TM23H	13" K7200 CGA W/SMPS	088X0399-001	A34JLL40X23 ORION 13"		
WGM1372-K0TM63H	13" K7200 CGA KIT	088X0399-001	A34JLL40X23 ORION 13"		
WGM1372-M1TM57F	13" K7200 CGA W/SMPS	088X0397-001	A34LEX10 SAMTEL 13"	088X0399-001	A34JLL40X23 ORION 13"
WGM1372-M1TS30F	13" K7200 CGA W/SMPS	088X0397-001	A34LEX10 SAMTEL 13"	088X0399-001	A34JLL40X23 ORION 13"
WGM1372-H0TS42J	13" K7200 CGA W/SMPS	088X0399-001	A34JLL90X23 13" ORION		
WGM1372-P1TS50G	13" K7200 CGA W/PLAS CAB	088X0399-001	A34JLL40X23 ORION 13"		
WGM1403-K0DM29D	DD 14" MONO MONITOR CUST III VGA	088X0311-506	M32EAA3WW PHILIPS 14"		
WGM1404-K0DM37D	DD 14" MONO MON CUST IVA 90DEG	088X0355-506	VDC1401P4BP 14"		
WGM1410-H6DS12C	DD 14" VGA CLR MON	088X0345-001	M34JRW30X03 ORION 14"		
WGM1410-M3DS03C	DD 14" VGA CLR MON .42MM	088X0345-001	M34JRW30X03 ORION 14"		
WGM1430-M7DS49E	14" SVGA CLR MON .28MM	088X0379-001	M34KXG30X55 ORION 14"		
WGM1430-M8DS49G	14" U3000 VGA/SVGA KIOSK	088X0379-001	M34KXG30X55 ORION 14"		
WGM1430-M7AS50E	14" U3000 VGA/SVGA	088X0379-001	M34KXG30X55 ORION 14"		
WGM1430-S3DS13F	14" U3000 VGA/SVGA .39MM	088X0379-001	M34KXG30X55 ORION 14"		
WGM1431-K0DS01J	14" U3100 VGA KIT W/3 FT CBL	088X0400-001	M34EDC14X36 PHILIPS 14"		
WGM1431-K0DS38F	14" U3100 VGA KIT W/3 FT VID CBL	088X0379-001	M34KXG30X55 ORION 14"		
WGM1431-M1DM07H	14" U3100 VGA W/3 FT CBL	088X0379-001	M34KXG30X55 ORION 14"		
WGM1431-M1DS09H	14" U3100 VGA W/3 FT CBL	088X0379-001	M34KXG30X55 ORION 14"		
WGM1431-M1DS62G	14" U3100 VGA CLR MON	088X0379-001	M34KXG30X55 ORION 14"		
WGM1431-M7DS62G	14" U3100 VGA W/3 FT CBL	088X0379-001	M34KXG30X55 ORION 14"		
WGM1431-S1DS62H	14" U3100 VGA W/3 FT CBL	088X0400-001	M34EDC14X36 PHILIPS 14"	088X0379-001	M34KXG30X55 ORION 14"
WGM1431-S3DS13F	14" U31 VGA W/3 FT CBL	088X0400-001	M34EDC14X36 PHILIPS 14"	088X0379-001	M34KXG30X55 ORION 14"
WGM1730-M2DS15F	17" U3000 SVGA	088X0412-001	M41EEM311X362 PHLP 17"		
WGM1730-M3DS42G	17" U3000 KIOSK W/AC CORD	088X0412-001	M41EEM311X362 PHLP 17"		
WGM1730-U1DS32F	17" U3000 UNIV W/SMPS	088X0412-001	M41EEM311X362 PHLP 17"		
WGM1770-U2TS19G	17" K7000 CGA UNIV	088X0364-001	A41EFN40X01 PHILIPS 17"		
WGM1930-H0TS19E	19" U3000 VGA HOR	088X0290-506	A48ACB24X RAULAND 19"		
WGM1930-M2TS08F	19" U3000 VGA	088X0290-506	A48ACB24X RAULAND 19"		
WGM1930-M2TS42E	19" U3000 VGA	088X0290-506	A48ACB24X RAULAND 19"		
WGM1931-M2TS26H	19" U3100 VGA/SVGA	088X0290-506	A48ACB24X RAULAND 19"		
WGM1930-M3TS43G	19" U3000 KIOSK W/AC CORD	088X0290-506	A48ACB24X RAULAND 19"		
WGM1970-H0GS10F	19" K7000 CGA HOR	088X0403-506	A48KRD89X SAMSUNG 19"	088X0299-506	A48ACB32X RAULAND 19"
WGM1970-H0GS66A	19" K7000 CGA HOR	088X0299-506	A48ACB32X RAULAND 19"		
WGM1970-H0GS86J	19" K7000 CGA HOR	088X0299-506	A48ACB32X RAULAND 19"		
WGM1970-U2GS04B	19" K7000 CGA UNIV	088X0403-506	A48KRD89X SAMSUNG 19"	088X0299-506	A48ACB32X RAULAND 19"
WGM1972-H0GS66F	19" K7200 CGA HOR W/SMPS	088X0299-506	A48ACB32X RAULAND 19"		

PARTS

REGISTERED ISO 9001 QUALITY
certificate № 0104

CRT CROSS REFERENCE ALT. P/N

MODEL	DESCRIPTION	CRT WG P/N	MFR P/N	ALT CRT	MFR P/N
WGM1972-H0GS66H	19" K7200 CGA HOR W/SMPS	088X0403-506	A48KRD89X SAMSUNG 19"		
WGM1972-H0TM11G	19" K7200 CGA W/SMPS	088X0290-506	A48ACB24X RAULAND 19"		
WGM1972-M2GM51F	19" K7200 CGA W/SMPS	088X0299-506	A48ACB32X RAULAND 19"		
WGM1972-M2GM54H	19" K7200 CGA W/SMPS	088X0403-506	A48KRD89X SAMSUNG 19"		
WGM1972-U2GS05G	19" K7200 CGA UNIV W/SMPS	088X0403-506	A48KRD89X SAMSUNG 19"	088X0299-506	A48ACB32X RAULAND 19"
WGM1972-M1GS18H	19" K7200 CGA CLR MON	088X0413-506	A48JLL40X46 ORION 19"		
WGM1972-M1GS37J	19" K7200 CGA CLR MON	088X0413-506	A48JLL40X46 ORION 19"		
WGM1972-M2GS27H	19" K7200 CGA W/EXTRA WIDTH	088X0413-506	A48JLL40X46 ORION 19"		
WGM1972-M2TS27H	19" K7200 CGA W/EXTRA WIDTH	,088X0416-506	A48AAB37X RCA 19"		
WGM1972-M3TS10H	19" K7200 CGA KIOSK W/NTSC	088X0416-506	A48AAB37X RCA 19"		
WGM1972-U2TS45H	19" K7200 CGA UNIV W/SMPS	088X0416-506	A48AAB37X RCA 19"		
WGM1972-W6TS29J	19" K7200 CGA CLR W/SMPS	088X0282-506	A48JLL40X46 ORION 19"		
WGM1972-U2TS04G	19" K7200 CGA UNIV W/SMPS	088X0416-506	A48AAB37X RCA 19"		
WGM1972-U2TS24G	19" K7200 CGA UNIV AUST	088X0416-506	A48AAB37X RCA 19"		
WGM1972-U2GS49H	19" K7200 CGA UNIV W/SMPS	088X0299-506	A48ACB32X RAULAND 19"		
WGM1980-S3TS30C	19" K8000 COLOR VGA MON	088X0290-506	A48ACB24X RAULAND 19"	088X0416-506	A48AAB37X RCA 19"
WGM1980-S1TS83K	19" K8000 CLR VGA MON	088X0308-001	M48JLJ10X45 HITACHI 19"		
WGM1980-H0TS17E	19" K8000 VGA HOR	088X0290-506	A48ACB24X RAULAND 19"	088X0416-506	A48AAB37X RCA 19"
WGM1980-H0TS95A	19" K8000 CLR MON	088X0290-506	A48ACB24X RAULAND 19"	088X0416-506	A48AAB37X RCA 19"
WGM1980-H0GS95A	19" K8000 VGA HOR	088X0299-506	A48ACB32X RAULAND 19"	088X0416-506	A48AAB37X RCA 19"
WGM2520-U3GM45F	25" U2000 CGA UNIV	088X0373-506	A63AGD10X RAULAND 25"	088X0387-506	A63ADT15X05 W/G 25"
WGM2520-U4GS25F	25" U2000 CGA UNIV	088X0373-506	A63AGD10X RAULAND 25"	088X0387-506	A63ADT15X05 W/G 25"
WGM2520-W0AS46F	25" U2000 CGA RGB VIDEO STAX	088X0350-001	A63ADT15X05 RCA 25"		
WGM2520-W4AS45G	25" U2 RGB V/S W/FNT CTRS	088X0350-001	A63ADT15X05 RCA 25"		
WGM2520-W4TS46G	25" U2 RGB/NTSC V/S W/FNT CTLS	088X0350-001	A63ADT15X05 RCA 25"		
WGM2550-U6GM12F	25" U5000 CGA/EGA UNIV	088X0373-506	A63AGD10X RAULAND 25"	088X0376-506	A63AGD01X RAULAND 25"
WGM2550-U4AR07G	25" U5000 CGA UNIV W/HV CAP	088X0385-506	A63AGD10X RAUL 25"		
WGM2550-U4GR43H	25" U5000 CGA UNIV	088X0373-506	A63AGD10X RAULAND 25"	088X0376-506	A63AGD01X RAULAND 25"
WGM2550-U4GR46H	25" U5000 CGA UNIV	088X0373-506	A63AGD10X RAULAND 25"	088X0376-506	A63AGD01X RAULAND 25"
WGM2550-U4GR50H	25" U5000 CGA UNIV	088X0409-506	B63AFW20X PHIL 25"	088X0404-506	A63AFW36X PHIL 25"
WGM2550-U4GR60G	25" U5000 CGA UNIV	088X0373-506	A63AGD10X RAULAND 25"	088X0376-506	A63AGD01X RAULAND 25"
WGM2550-U4GS22F	25" U5000 CGA UNIV	088X0373-506	A63AGD10X RAULAND 25"	088X0376-506	A63AGD01X RAULAND 25"
WGM2570-H1TS39C	25" K7000 CGA HOR W/COMP VID	088X0387-001	A63ADT15X05 W/G 25"		
WGM2574-H1GS76H	25" K7400 CGA HORIZ	088X0387-001	A63ADT15X05 W/G 25"		
WGM2574-U4GR41H	25" K7400 CGA UNIV	088X0373-506	A63AGD10X RAULAND 25"	088X0376-506	A63AGD01X RAULAND 25"
WGM2574-U4GS55H	25" K7400 CGA UNIV	088X0407-506	A63AHC26X RCA 25"	088X0387-001	A63ADT15X05 W/G TLT 25"
WGM2574-W4TS51H	25" K7400 VIDEO STAX W/NTSC	088X0350-001	A63ADT15X05 RCA 25"		
WGM2575-U4GR17H	25" K7500 MID RES UNIV	088X0373-506	A63AGD10X RAULAND 25"	088X0376-506	A63AGD01X RAULAND 25"
WGM2575-U4TR02J	25" K7500 MID RES UNIV	088X0415-506	A63AFW36X PHIL 25"		
WGM2575-U4TR05J	25" K7500 MID RES UNIV	088X0415-506	A63AFW36X PHIL 25"		
WGM2720-U0BS03G	27" U2000 CGA UNIV	088X0375-506	A68ADG01X RAULAND 27"		
WGM2720-W1AS47F	27" U2000 RGB VIDEO STAX	088X0374-001	A68ADT25X01 RCA 27"		
WGM2720-W5TS17G	27" U2000 V/S W/FRT CTLS	088X0374-001	A68ADT25X01 RCA 27"		
WGM2730-S4TS16F	27" U3000 VGA	088X0370-001	"A68AEG25X07 RCA 27"		
WGM2730-S5TS64H	27" U3000 VGA	088X0370-001	A68AEG25X07 RCA 27"		
WGM2730-U0TS55F	27" U3000 VGA UNIV	088X0370-001	A68AEG25X07 RCA 27"		
WGM2730-W2TS49F	27" U3000 VGA VIDEO STAX	088X0370-001	A68AEG25X07 RCA 27"		
WGM2752-U0GS37F	27" U5000 CGA/EGA UNIV	088X0414-506	A68AGD02X RAUL 27"		
WGM2770-H9GS39E	27" K7000 CGA HOR	088X0375-506	A68ADG01X RAULAND 27"		
WGM2774-U0GS08G	27" K7400 CGA UNIV	088X0414-506	A68AGD02X RAUL 27"		
WGM2774-U0GS42H	27" K7400 CGA UNIV	088X0414-506	"A68AGD02X RAUL 27"	088X0375-506	A68AGD01X RAULAND 27"
WGM2774-W5TS52H	27" K7400 V/S W/NTSC	088X0374-001	A68ADT25X01 RCA 27"		

WELLS-GARDNER
ELECTRONICS CORPORATION

PARTS

ISO 9001
certificate № 0104

CRT CROSS REFERENCE ALT. P/N

MODEL	DESCRIPTION	CRT WG P/N	MFR P/N	ALT CRT	MFR P/N
WGM2775-U0GS37H	27" K7500 EGA UNIV	088X0414-506	A68AGD02X RAUL 27"	088X0375-506	A68AGD01X RAULAND 27"
WGM2775-U0GS61H	27" K7500 EGA UNIV	088X0414-506	A68AGD02X RAUL 27"	088X0375-506	A68AGD01X RAULAND 27"
WGM2775-U0TS61H	27" K7500 EGA UNIV	088X0411-506	A68AGD01X RAUL 27"		
WGM3330-U0GS52F	33" U3000 CGA UNIV	088X0353-001	B80EFF272X53 PHILIPS 31"		
WGM3331-U0TS59G	33" U3 EGA UNIV W/VID & AC CBL	088X0392-506	M78LCU30X HITACHI 31"		
WGM3332-S5TS65H	33" U3000 VGA	088X0392-506	M78LCU30X HITACHI 31"		
WGM3332-U0TS65G	33" U3000 VGA UNIV	088X0392-506	"M78LCU30X HITACHI 31"		
WGR1370- H0TS27C	13" K7000 CGA HOR W/FRT CTLS	088X0236-506	A34JLL00X VID/DISPL		
WGR1372-S1GS54G	13" K7200 CGA W/NEG VIDEO"	088X0397-001	A34LEX10X SAMTEL 13"	088X0399-001	A34JLL40X23 ORION 13"
WGR1970-H0BS66A	19" K7000 CGA HOR REMFG	088X0299-506	A48ACB32X 19"		
WGR1987-H0BS51G	19" K8000 CGA HOR REMFG	088X0299-506	A48ACB32X 19"		
WGR1988-H0GS52G	19" K8000 CGA HOR REMFG	088X0299-506	A48ACB32X 19"		
WGR2570-U1GS30K	25" K7000 CGA HOR REMFG	088X0407-506	A63AHC26X RCA 25"	088X0383-506	A63AFW36X VID/DISPL 25"
WGT1370-M1AS13E	13" K7000 CGA W/MT PNL BND	088X0236-001	A34JLL40X25 ORION 13"	613X0026-001	
WGT1372-K0TM12J	13" K7200 CGA W/PNL TAPED	088X0399-001	A34JLL40X23 ORION 13"	017X0259-001	
WGT1372-K0TS40F	13" K7200 CGA W/PNL TAPED	088X0399-001	A34JLL40X23 ORION 13"	017X0259-001	
WGT1372-K0TM22J	13" K7200 CGA W/PNL TAPED	088X0399-001	A34JLL40X23 ORION 13"	017X0259-001	
WGT1430-M7DS06H	14" U3000 SVGA W/TPE PNL	088X0379-001	M34KXG30X55 ORION 14"	613X0034-001	
WGT1730-S1DS78G	17" U3000 SVGA W/BND PNL	088X0366-001	M41EEM211X362 PHILIPS 17"	017X0250-001	
WGT1930-M1TS14J	19" U3000 SVGA W/BND PNL	088X0290-506	A48ACB24X RAULAND 19"	017X0238-001	
WGT1930-H0TS58G	19" U3000 SVGA W/TOUCH	088X0416-506	A48AAB37X RCA 19"	017X0238-001	
WGT1930-M2TS31F	19" U3000 SVGA W/TOUCH	088X0416-506	A48AAB37X RCA 19"	017X0240-001	
WGT1930-S2TS76G	19" U3000 SVGA W/TOUCH	088X0416-506	A48AAB37X RCA 19"	017X0238-001	
WGT1930-S2TS28F	19" U3000 SVGA W/TOUCH	088X0416-506	A48AAB37X RCA 19"	017X0238-001	
WGT1930-S2TS05F	19" U3000 SVGA W/TOUCH	088X0416-506	A48AAB37X RCA 19"	017X0238-001	
WGT1930-M2TS44F	19" U3000 SVGA W/TOUCH	088X0416-506	A48AAB37X RCA 19"	017X0238-001	
WGT1930-M2TS29F	19" U3000 SVGA W/TOUCH	088X0416-506	A48AAB37X RCA 19"	017X0249-001	
WGT1930-M2TS13G	19" U3000 SVGA W/TOUCH	088X0416-506	A48AAB37X RCA 19"	017X0249-001	
WGT1930-M2TS04H	19" U3000 SVGA W/TOUCH	088X0416-506	A48AAB37X RCA 19"	017X0253-001	
WGT1930-M1TS14E	19" U3000 SVGA W/TOUCH	088X0416-506	A48AAB37X RCA 19"	017X0238-001	
WGT1930-M3TS33F	19" U3000 SVGA KIOSK W/TOU	088X0290-506	A48ACB24X RAULAND 19"	017X0238-001	
WGT1930-S5TS39F	19" U3 VGA SLANT TOP W/TOUCH	088X0290-506	A48ACB24X RAULAND 19"	017X0238-001	
WGT1930-S5TS48H	19" U3 VGA SLANT TOP W/TOUCH	088X0290-506	A48ACB24X RAULAND 19"	017X0238-001	
WGT1931-M2TS24J	19" U3100 VGA W/TOUCH	088X0416-506	A48AAB37X RCA 19"	017X0238-001	
WGT1931-M1TS69H	19" U3100 VGA W/TOUCH	088X0416-506	A48AAB37X RCA 19	613X0036-001	
WGT1970-M1GS20F	19" K7000 CGA W/TOUCH	088X0299-506	A48ACB32X 19"	613X0027-001	
WGT1970-H0TS06D	19" K7000 CGA W/TOUCH	088X0347-506	MV48AFS05X PHILIPS 19"	613X0023-001	
WGT1970-H0GS53F	19" K7000 CGA W/TOUCH	088X0299-506	A48ACB32X 19"	017X0238-001	
WGT1970-H0GS07F	19" K7000 CGA W/TOUCH	088X0299-506	A48ACB32X 19"	613X0027-001	
WGT1970-H0TS03D	19" K7 CGA HOR W/BND PNL	088X0290-506	A48ACB24X RAULAND 19"	613X0020-001	
WGT1970-U2TS34G	19" K7000 CGA UNIV W/TOUCH	088X0290-506	A48ACB24X RAULAND 19"	017X0249-001	
WGT1970-U2TS30G	19" K7000 CGA UNIV W/TOUCH	088X0290-506	"A48ACB24X RAULAND 19"	017X0249-001	
WGT1972-M1GS18G	19" K7200 CGA W/TOUCH	088X0299-506	A48ACB32X 19"	017X0238-001	
WGT1972-H0GS73G	19" K7200 CGA W/INVERTED TOUCH	088X0413-506	A48JLL40X46 ORION 19"	017X0234-001	
WGT1972-H0TS29H	19" K7200 CGA W/TOUCH	088X0282-506	A48JLL40X46 ORION 19"	017X0238-001	
WGT1972-M3TS72G	19" K72 CGA W/NTSC/TOU/KIOSK	088X0416-506	"A48AAB37X RCA 19"	017X0238-001	
WGT1972-U2GS19J	19" K72 CGA W/TAPED TOUCH	088X0282-506	A48JLL40X46 ORION 19"	017X0238-001	
WGT1972-U2GS06G	19" K72 CGA UNIV W/PNL TAPE	088X0299-506	A48ACB32X 19"	017X0238-001	
WGT1972-U2TS53H	19" K72 CGA UNIV W/TOUCH NO CTLR	088X0290-506	A48ACB24X RAULAND 19"	017X0249-001	
WGZ1373-H0GS01H	13" K7300 CGA HOR	2B4CT41SS143	"A34KQV42X01 ITC 13"		
WGZ1373-H0GS09J	13" K7300 CGA HOR W/MOD BRKTS	2B4CT41SS143	"A34KQV42X01 ITC 13"		
WGZ1973-H0GS02H	19" K7300 CGA HOR	2B4CT41SS203	A48KRD82X01 ITC 19"		
WGZ1973-U2GS14H	19" K7300 CGA UNIV	2B4CT41SS203	A48KRD82X01 ITC 19"		

CHASSIS CROSS REFERENCE ALT. P/N

MODEL	DESCRIPTION	CHASSIS	ALT CHASSIS	NECK BOARD
WGM1370-H9TS10C	13" K7000 CGA HORIZ	054A7893-001	SEE NOTE PG 85	025A1342-001
WGM1370-H0GS53G	13" K7000 CGA HORIZ ORION	054A7801-004	SEE NOTE PG 85	025A1342-001
WGM1370-H0GS64E	13" K7000 CGA HORIZ ORION	054A7801-004	SEE NOTE PG 85	025A1342-001
WGM1370-H0TS27D	13" K7000 CGA FRONT CTRL	054A7801-004	SEE NOTE PG 85	025A1342-001
WGM1370-H0TS31G	13" K7000 CGA HORIZ ORION	054A7806-006	054A7806-003	025A1342-001
WGM1370-M1TS41D	13" K7000 CGA HORIZ	054A7809-001	SEE NOTE PG 85	025A1342-001
WGM1370-M1TS48D	13" K7000 CGA HORIZ	054A7866-003	SEE NOTE PG 85	025A1342-001
WGM1370-M3TS18F	13" K7000 CGA HORIZ W/SMPS P715	054A7887-002	SEE NOTE PG 85	025A1342-001
WGM1370-M2TS13J	13" K7000 CGA HORIZ	054A7836-003	054A7836-001	025A1342-001
WGM1370-H0TS27C	13" K7000 CGA HORIZ ORION	054A7801-004	SEE NOTE PG 85	025A1342-001
WGM1371-K0TM13C	13" K7000 CGA KIT W/.7V VIDEO	054A7817-001	SEE NOTE PG 85	054A7817-002
WGM1372-H0GS26G	13" K7200 CGA HORIZ W/SMPS	054A7201-003		025A1445-001
WGM1372-H0TS37G	13" K7200 CGA HORIZ W/SMPS	054A7201-003		025A1445-001
WGM1372-H0TS77G	13" K7200 CGA W/2 PIN PWR CONN	054A7201-015		025A1445-001
WGM1372-H0TS27G	13" K7200 CGA HORIZ W/SMPS	054A7201-010		025A1445-001
WGM1372-K0TM10G	RS13" K7200 CGA KIT W/SMPS	054A7201-016		025A1445-001
WGM1372-K0TM23H	13" K7200 CGA W/SMPS	054A7201-017		038A7319-000
WGM1372-K0TM63H	13" K7200 CGA KIT	054A7201-017		038A7319-000
WGM1372-M1TM57F	13" K7200 CGA W/SMPS	054A7201-003	054A7201-010	025A1445-001
WGM1372-M1TS30F	13" K7200 CGA W/SMPS	054A7201-002	054A7201-011	038A7319-000
WGM1372-H0TS42J	13" K7200 CGA W/SMPS	054A7201-020		025A1445-001
WGM1372-P1TS50G	13" K7200 CGA W/PLAS CAB	054A7201-014		025A1445-001
WGM1403-K0DM29D	DD 14 MONO MON CUST III VGA	054A3507-001		
WGM1404-K0DM37D	DD 14 MONO MON CUST IVA 90 DEG	054A3709-001		
WGM1410-H6DS12C	DD 14 VGA CLR MON	025A1372-001		
WGM1410-M3DS03C	DD 14 VGA CLR MON .42MM	025A1372-001		
WGM1430-M7DS49E	DD 14 SVGA CLR MON .28MM	054A3002-006		025A1354-001
WGM1430-M8DS49G	DD 14 VGA KIOSK	054A3002-002		025A1354-001
WGM1430-M7AS50E	14" U3000 VGA/SVGA	054A3002-006		025A1354-001
WGM1430-S3DS13F	14" U3000 VGA/SVGA	054A3002-006		025A1354-001
WGM1431-K0DS01J	14" U3100 VGA KIT W/3 FT CBL	054A3101-008		054A0787-004
WGM1431-K0DS38F	14" U3100 VGA KIT W/3 FT VID CBL	054A3101-006		054A0787-002
WGM1431-M1DM07H	14" U3100 VGA W/3 FT CBL	054A3101-006		054A0787-004
WGM1431-M1DS09H	14" U3100 VGA W/3 FT CBL	054A3101-006		054A0787-002
WGM1431-M1DS62G	14" U3000 VGA CLR MON	054A3101-006		054A0787-002
WGM1431-M7DS62G	14" U3100 VGA W/3 FT CBL	054A3101-006		054A0787-002
WGM1431-S1DS62H	14" U3100 VGA W/3 FT CBL	054A3101-008	054A3101-004	054A0787-004
WGM1431-S3DS13F	14" U31 VGA W/3 FT CBL	054A3101-008	054A3101-004	054A0787-004
WGM1730-M2DS15F	17" U3000 SVGA	054A3004-002		025A1441-001
WGM1730-M3DS42G	17" U3000 KIOSK W/AC CORD	054A3004-001		025A1441-001
WGM1730-U1DS32F	17" U3000 UNIV W/SMPS	054A3004-002		025A1441-001
WGM1770-U2TS19G	17" K7000 CGA UNIV	054A7689-003		025A1342-001
WGM1930-H0TS19E	19" U3000 VGA HOR	054A3001-001		025A1354-001
WGM1930-M2TS08F	19" U3000 VGA	054A3001-001		025A1354-001
WGM1930-M2TS42E	19" U3000 VGA	054A3001-001		025A1354-001
WGM1931-M2TS26H	19" U3100 VGA/SVGA	054A3102-001		054A0787-005
WGM1930-M3TS43G	19" U3000 KIOSK W/AC CORD	054A3001-005		025A1354-001
WGM1970-H0GS10F	19" K7000 CGA HOR	054A7901-023	054A7901-016	025A1342-001
WGM1970-H0GS66A	19" K7000 CGA HOR	054A7901-012	SEE NOTE PG 85	025A1341-001
WGM1970-H0GS86J	19" K7000 CGA HOR	054A7922-003	SEE NOTE PG 85	054A0448-001
WGM1970-U2GS04B	19" K7000 CGA UNIV	054A7901-022	054A7901-021	025A1342-001
WGM1972-H0GS66F	19" K7200 CGA HOR W/SMPS	054A7201-001		025A1446-001
WGM1972-H0GS66H	19" K7200 CGA HOR W/SMPS	054A7200-009		054A7200-018

CHASSIS CROSS REFERENCE ALT. P/N

MODEL	DESCRIPTION	CHASSIS	ALT CHASSIS	NECK BOARD
WGM1972-H0TM11G	19" K7200 CGA W/SMPS	054A7200-004		054A7200-007
WGM1972-M2GM51F	19" K7200 CGA W/SMPS	054A7200-002		025A1446-001
WGM1972-U2TS45H	19" K7200 CGA UNIV W/SMPS	054A7200-001		025A1446-001
WGM1972-W6TS29J	19" K7200 CGA CLR W/SMPS	054A7200-020		054A7200-018
WGM1972-M2GM54H	19" K7200 CGA W/SMPS	054A7200-011		054A7200-018
WGM1972-U2GS05G	19" K7200 CGA UNIV W/SMPS	054A7200-012	054A7200-001	054A7200-018
WGM1972-M1GS18H	19" K7200 CGA UNIV W/SMPS	054A7200-001		025A1446-001
WGM1972-M1GS37J	19" K7200 CGA UNIV W/SMPS	054A7200-024		054A7200-018
WGM1972-M2GS27H	19" K7200 CGA W/EXTRA WIDTH	054A7200-013		054A7200-014
WGM1972-M2TS27H	19" K7200 CGA W/EXTRA WIDTH	054A7200-006		054A7200-007
WGM1972-M3TS10H	19" K7200 CGA KIOSK W/NTSC	054A7200-005		025A1446-001
WGM1972-U2GS49H	19" K7200 CGA UNIV W/SMPS	054A7200-008		054A7200-018
WGM1972-U2TS04G	19" K7200 CGA UNIV W/SMPS	054A7200-001		025A1446-001
WGM1972-U2TS24G	19" K7200 CGA UNIV W/SMPS	054A7200-001		025A1446-001
WGM1980-S3TS30C	19" K8000 CLR VGA MON	054A8010-001		025A1354-001
WGM1980-S1TS83K	19" K8000 CLR VGA MON	054A8002-001		025A1354-001
WGM1980-H0TS17E	19" K8000 CLR VGA MON	054A8004-001		025A1354-001
WGM1980-H0TS95A	19" K8000 CLR MON	054A8004-001		025A1354-001
WGM1980-H0GS95A	19" K8000 VGA HOR	054A8004-001		025A1354-001
WGM2520-U4GS25F	25" U2000 CGA UNIV	054A2193-006		025A1414-001
WGM2520-U3GM45F	25" U2000 CGA UNIV	054A2193-004		025A1414-001
WGM2520-W0TS46F	25" U2000 CGA RGB VIDEO STAX	054A2193-008		054A2193-009
WGM2520-W4AS45G	25" U2 RGB V/S W/FNT CTRS	054A2193-018		054A2193-017
WGM2520-W4TS46G	25" U2 RGB/NTSC V/S W/FNT CTLS	054A2193-018		054A2193-009
WGM2550-U6GM12F	25" U5000 CGA/EGA UNIV	054A5191-001		025A1414-001
WGM2550-U4TR07G	25" U5000 CGA UNIV W/HV CAP	054A5191-004		025A1414-001
WGM2550-U4GR43H	25" U5000 CGA UNIV	054A5191-006		025A1414-001
WGM2550-U4GR46H	25" U5000 CGA UNIV	054A5191-006,		025A1414-001
WGM2550-U4GR50H	25" U5000 CGA UNIV	054A5191-006		025A1414-001
WGM2550-U4GR60G	25" U5000 CGA UNIV	054A5191-006		025A1414-001
WGM2550-U4GS22F	25" U5000 CGA UNIV	054A5191-002		025A1414-001
WGM2570-H1TS39C	25" K7000 CGA HOR W/COMP VID	054A7129-004		025A1414-001
WGM2574-H1GS76H	25" K7400 CGA HORIZ	054A7401-009		025A1414-001
WGM2574-U4GR41H	25" K7400 CGA UNIV	054A7401-001		025A1414-001
WGM2574-U4GS55H	25" K7400 CGA UNIV	054A7401-001	054A7401-009	025A1414-001
WGM2574-W4TS51H	25" K7400 VIDEO STAX W/NTSC	054A7401-011		025A1414-001
WGM2575-U4GR17H	25" K7500 MID RES UNIV	054A7501-001		025A1414-001
WGM2575-U4TR02J	25" K7500 MID RES UNIV	054A7501-003		025A1414-001
WGM2575-U4TR05J	25" K7500 MID RES UNIV	054A7501-003		025A1414-001
WGM2720-U0BS03G	27" U2000 CGA UNIV	054A2391-013		025A1414-001
WGM2720-W1AS47F	27" U2000 RGB VIDEO STAX	054A2193-008		054A2193-009
WGM2720-W5TS17G	27" U2000 V/S W/FRT CTLS	054A2193-018		025A1414-001
WGM2730-S4TS16F	27" U3000 VGA	054A3003-014		054A0583-002
WGM2730-S5TS64H	27" U3000 VGA	054A3003-014		054A0583-002
WGM2730-U0TS55F	27" U3000 VGA UNIV	054A3003-014		054A0583-002
WGM2730-W2TS49F	27" U3000 VGA VIDEO STAX	054A3003-015		054A0583-002
WGM2752-U0GS37F	27" U5000 CGA/EGA UNIV	054A5201-002		025A1414-001
WGM2770-H9GS39E	27" K7000 CGA HOR	054A7330-001		025A1341-001
WGM2774-U0GS08G	27" K7400 CGA UNIV	054A7401-002		025A1414-001
WGM2774-U0GS42H	27" K7400 CGA UNIV	054A7401-007		025A1414-001
WGM2774-W5TS52H	27" K7400 V/S W/NTSC	054A7401-012		025A1414-001
WGM2775-U0GS37H	27" K7500 EGA UNIV	054A7501-002		025A1414-001

CHASSIS CROSS REFERENCE ALT. P/N

MODEL	DESCRIPTION	CHASSIS	ALT CHASSIS	NECK BOARD
WGM2775-U0GS61H	27" K7500 EGA UNIV	054A7501-002		025A1414-001
WGM2775-U0TS61H	27" K7500 EGA UNIV	054A7501-002		025A1414-001
WGM3330-U0GS52F	33" U3000 CGA UNIV	054A3401-001		054A0583-002
WGM3331-U0TS59G	33" U3 EGA UNIV W/VID & AC CBL	054A3201-005		054A0583-002
WGM3332-S5TS65H	33" U3000 VGA	054A3301-001		054A0583-002
WGM3332-U0TS65G	33" U3000 VGA UNIV	054A3301-001		054A0583-002
WGR1370- H0TS27C	13" K7000 CGA HOR W/FRT CTLS	506A34JLL00X		025A1342-001
WGR1372-S1GS54G	13" K7200 CGA W/NEG VIDEO	054A7201-007	054A7201-012	025A1445-001
WGR1970-H0GS66A	19" K7000 CGA HOR REMFG	054A7901-012		025A1341-001
WGR1987-H0GS51G	19" K8000 CGA HOR REMFG	054A8304-001		025A1354-001
WGR1988-H0GS52G	19" K8000 CGA HOR REMFG	054A8304-002		025A1354-001
WGR2570-U1GS30K	25" K7000 CGA HOR REMFG	054A7193-001		025A1341-001
WGT1370-M1TS13E	13" K7000 CGA W/PNL BND	054A7801-004		025A1342-001
WGT1372-K0TM12J	13" K7200 CGA WPNL TAPED	054A7201-018		025A1445-001
WGT1372-K0TS40F	13" K7200 CGA WPNL TAPED	054A7201-009		025A1445-001
WGT1372-K0TM22J	13" K7200 CGA WPNL TAPED	054A7201-019		025A1445-001
WGT1430-M7DS06H	14" U3000 SVGA W/TAPED PNL	054A3002-006		025A1354-001
WGT1730-S1DS78G	17" U3000 SVGA W/BND PNL	054A3004-003		025A1441-001
WGT1930-M1TS14J	19" U3000 SVGA W/BND PNL	054A3001-001		025A1354-001
WGT1930-M3TS33F	19" U3000 SVGA KIOSK W/TOU	054A3001-005		025A1354-001
WGT1930-S5TS39F	19" U3 VGA SLANT TOP W/TOUCH	054A3001-001		025A1354-001
WGT1930-S2TS76G	19" U3000 VGA W/TOUCH	054A3001-002		025A1354-001
WGT1930-S2TS28F	19" U3000 VGA W/TOUCH	054A3001-002		025A1354-001
WGT1930-S2TS05F	19" U3000 VGA W/TOUCH	054A3001-002		025A1354-001
WGT1930-M2TS44F	19" U3000 VGA W/TOUCH	054A3001-001		025A1354-001
WGT1930-M2TS31F	19" U3000 VGA W/TOUCH	054A3001-001		025A1354-001
WGT1930-M2TS29F	19" U3000 VGA W/TOUCH	054A3001-004		025A1354-001
WGT1930-M2TS13G	19" U3000 VGA W/TOUCH	054A3001-001		025A1354-001
WGT1930-M2TS04H	19" U3000 VGA W/TOUCH	054A3001-006		025A1354-001
WGT1930-H0TS58G	19" U3000 VGA W/TOUCH	054A3001-001		025A1354-001
WGT1930-S5TS48H	19" U3 VGA SLANT TOP W/TOUCH	054A3001-007		025A1354-001
WGT1930-M1TS14E	19" U3000 HORIZ VGA W/TOUCH	054A3001-001		025A1354-001
WGT1931-M2TS24J	19" U3100 VGA W/TOUCH	054A3102-003		054A0787-005
WGT1931-M1TS69H	19" U3100 VGA W/TOUCH	054A3102-002		054A0787-005
WGT1970-M1GS20F	19" K7000 CGA W/TOUCH	054A7901-012		025A1341-001
WGT1970-H0TS06D	19" K7000 CGA W/TOUCH	054A7906-002		025A1342-001
WGT1970-H0GS53F	19" K7000 CGA W/TOUCH	054A7901-012		025A1341-001
WGT1970-H0GS07F	19" K7000 CGA W/TOUCH	054A7901-012		025A1341-001
WGT1970-H0TS03D	19" K7 CGA HOR W/BND PNL	054A7928-002		054A0448-001
WGT1970-U2TS34G	19" K7000 CGA UNIV W/TOUCH	054A7689-004		054A7689-004
WGT1970-U2TS30G	19" K7000 CGA UNIV W/TOUCH	054A7901-021		025A1341-001
WGT1972-U2GS19J	19" K7000 CGA UNIV W/TOUCH	054A7200-015		054A7200-014
WGT1972-M3TS72G	19" K72 CGA W/NTSC/TOU/KIOSK	054A7200-005		025A1446-001
WGT1972-M1BS18G	19" K7200 CGA W/TOUCH	054A7200-003		025A1446-001
WGT1972-H0GS73G	19" K7200 CGA W/TOUCH INVERTED	054A7200-025	054A7200-018	
WGT1972-H0TS29H	19" K7200 CGA W/TOUCH	054A7200-021		054A7200-018
WGT1972-U2GS06G	19" K72 CGA UNIV W/PNL TAPE	054A7200-016		025A1446-001
WGT1972-U2TS53H	19" K72 CGA UNIV W/TOU NO CTLR	054A7200-008	054A7200-026	054A7200-018
WGZ1373-H0GS01H	13" K7300 CGA HOR	025A1487-001		025A1488-001
WGZ1373-H0GS09J	13" K7300 CGA HOR W/MOD BRKTS	025A1487-001	025A1488-001	
WGZ1973-H0GS02H	19" K7300 CGA HOR	025A1489-001		025A1490-001
WGZ1973-U2GS14H	19" K7300 CGA UNIV	025A1489-001		025A1490-001

WELLS-GARDNER
ELECTRONICS CORPORATION

PARTS

ISO 9001
certificate Nº 0104

CHASSIS CROSS REFERENCE ALT. P/N

K7000 CHASSIS REPLACEMENT USING A K7200 CHASSIS

19" STANDARD NECK 29MM

054A7200-001	CHASSIS PREP K7200 PCB P757 19"
038A7893-000	AC ADAPTOR K72- K7200
025A1446-001	K7200 29MM NECK BOARD

19" MINI NECK 22MM

054A7200-019	CHASSIS PREP K7200 PCB P757 19"
038A7893-000	AC ADAPTOR K72- K7200
054A7200-018	NECK PCB PREP 22MM

13" MINI NECK 22MM

054A7201-003	CHASSIS PREP K7200 PCB P757 13"
038A7893-000	AC ADAPTOR K72- K7200
025A1445-001	NECK BOARD 22MM

NOTE: When using an 19" ORION picture tube with a K7200 chassis and neck board, R213 (filament resistor) should be 2.2 ohms 2W. When using an 19" RCA or RAULAND picture tube with a K7200 chassis and neck board, R213 (filament resistor) should be .68 ohms 2W. A washer is needed under one of the two mounting screws when installing a k7200 deflection board in a K7200 chassis pan.

WELLS-GARDNER
ELECTRONICS CORPORATION

PARTS

ISO 9001 REGISTERED QUALITY certificate № 0104

TOUCH SENSOR & CONTROLLER CROSS REFERENCE

MODEL	DESCRIPTION	TOUCH SENSORS P/N	CONTROLLER P/N
WGT1370-M1AS13E	13" K7000 CGA W/PNL BND	613X0026-001	613X0025-001
WGT1372-K0TM12J	13" K7200 CGA W/PNL TAPED	017X0259-001	017X0260-001
WGT1372-K0TS40F	13" K7200 CGA W/PNL TAPED	017X0259-001	017X0260-001
WGT1372-K0TM22J	13" K7200 CGA W/PNL TAPED	017X0259-001	017X0260-001
WGT1430-M7DS06H	14" U3000 SVGA W/TPE PNL	613X0034-001	613X0035-001
WGT1730-S1DS78G	17" U3000 SVGA W/BND PNL	017X0250-001	017X0239-001
WGT1930-M1TS14J	19" U3000 SVGA W/BND PNL	017X0238-001	017X0258-001
WGT1930-H0TS58G	19" U3000 SVGA W/TOUCH	017X0238-001	017X0239-001
WGT1930-M2TS31F	19" U3000 SVGA W/TOUCH	017X0240-001	017X0239-001
WGT1930-S2TS76G	19" U3000 SVGA W/TOUCH	017X0238-001	017X0241-001
WGT1930-S2TS28F	19" U3000 SVGA W/TOUCH	017X0238-001	017X0241-001
WGT1930-S2TS05F	19" U3000 SVGA W/TOUCH	017X0238-001	017X0241-001
WGT1930-M2TS44F	19" U3000 SVGA W/TOUCH	017X0238-001	017X0239-001
WGT1930-M2TS29F	19" U3000 SVGA W/TOUCH	017X0249-001	017X0243-001
WGT1930-M2TS31G	19" U3000 SVGA W/TOUCH	017X0249-001	017X0248-001
WGT1930-M2TS04H	19" U3000 SVGA W/TOUCH	017X0253-001	017X0254-001
WGT1930-M1TS14E	19" U3000 SVGA W/TOUCH	017X0238-001	017X0258-001
WGT1930-M3TS33F	19" U3000 SVGA KIOSK W/TOUCH	017X0238-001	
WGT1930-S5TS39F	19" U3 VGA SLANT TOP W/TOUCH	017X0238-001	017X0239-001
WGT1930-S5TS48H	19" U3000 HORIZ VGA W/TOUCH	017X0238-001	017X0258-001
WGT1931-M2TS24J	19" U3100 VGA W/TOUCH	017X0238-001	017X0239-001
WGT1931-M1TS69H	19" U3100 VGA W/TOUCH	613X0036-001	017X0237-001
WGT1970-M1GS20F	19" K7000 CGA W/TOUCH	613X0027-001	
WGT1970-H0TS06D	19" K7000 CGA W/TOUCH	613X0023-001	
WGT1970-H0GS53F	19" K7000 CGA W/TOUCH	017X0238-001	017X0239-001
WGT1970-H0GS07F	19" K7000 CGA W/TOUCH	613X0027-001	
WGT1970-H0TS03D	19" K7 CGA HOR W/BND PNL	613X0020-001	613X0021-001
WGT1970-U2TS34G	19" K7000 CGA UNIV W/TOUCH	017X0249-001	017X0248-001
WGT1970-U2TS30G	19" K7000 CGA UNIV W/TOUCH	017X0249-001	017X0248-001
WGT1972-M1GS18G	19" K7000 CGA W/TOUCH	017X0238-001	017X0239-001
WGT1972-H0GS73G	19" K72 CGA W/INVERTED TOUCH	017X0234-001	
WGT1972-H0TS29H	19" K7200 CGA W/TOUCH	017X0238-001	
WGT1972-M3TS72G	19" K72 W/NTSC/TOU/KIOSK	017X0238-001	
WGT1972-U2GS19J	19" K72 CGA W/TAPED TOUCH	017X0238-001	017X0260-001
WGT1972-U2GS06G	19" K72 CGA UNIV W/PNL TAPE	017X0238-001	017X0260-001
WGT1972-U2TS53H	19" K72 CGA UNIV W/TOU NO CTLR	017X0249-001	

WELLS-GARDNER
ELECTRONICS CORPORATION

PARTS

ISO 9001
certificate № 0104

KITS AND ACCESSORIES

SERVICE KITS	DESCRIPTION
S01G0000-000F	SERVICE GENERATOR KIT (SIGNAL)
S01J0000-000F	KIT U5000 H.O.T. UPDATE
S02A0000-000F	P660
S02D0000-000F	RS POWER CABLE 2-PIN CONNECTOR
S02G0000-000F	SERVICE U3000 PINCUSHION UPDATE KIT
S02J0000-000F	K7500 25" BOARDS/YOKE/TRSTR ASSEMBLY
S03D0000-000F	SIGNAL CABLE 10-PIN CONNECTOR
S03G0000-000F	COMPOSITE VIDEO KIT
S04E0000-000F	SERVICE U2000 POWER SUPPLY UPDATE
S05F0000-000F	SERV KIT U5000 VERTICAL SWEEP UPGRADE
S06F0000-000F	SERVICE KIT K8000 PWR SUP RETROFIT

ACCESSORIES	DESCRIPTION
013X1393-001	CABLE TOUCH SCREEN/CONTROLLER ADAPTER
038A7616-000	AC POWER CORD U3000 SERIES MONITORS
038A7893-000	AC ADAPTOR K7200-K7000 CONVERSION
038A7927-000	AC POWER CORD U2000,U3100,U5000,K7400,K7500
025A1417-001	SWTG P/S FOR 120VAC P715
025A1447-002	SWTG P/S 120VAC-240VAC P756 27"/33" U3000
025A1454-001	NTSC TO RGB VIDEO INTERFACE BOARD P765

WELLS-GARDNER
ELECTRONICS CORPORATION

SENSORS

MicroTouch Sensors

Note: Wells Gardner uses State-of-the-art technology for taping and bonding touch sensors to our monitors.

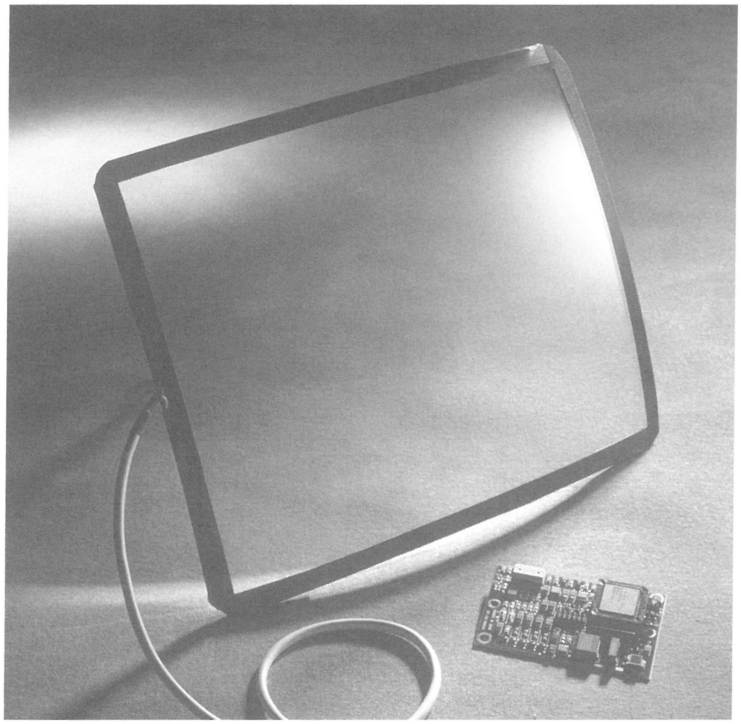

Environmental Robustness Operations unaffected by stagnant or moving water, dirt, dust, grease, or will on the sensor. Easily gasket-sealed for greater water-resistance.

Physical Durability Superior overcoat is scratch- and wear-resistant. Reliable to more than 20 million touches in any one location. Optical bonding provides shatterproof durability.

Sensitivity Recognizes touches of less than two ounces of force in as little as three milliseconds. Supports 1024 x 1024 resolution and tracks up to 270 points per second @ 19.2k band.

Accuracy Less than ±1% error within the recommended viewing area.

Clarity Your choice of three finishes to obtain desired clarity or antiglare properties. Optical bonding provides greater light transmission and image clarity.

Synergy with MicroTouch TouchTek™ You can use the same software drivers or a single chipset design on your motherboard to support ClearTek capacitive and TouchTek resistive touchscreens.

ISO 9001
certificate № 0104

WELLS-GARDNER
ELECTRONICS CORPORATION

SENSORS

MICROTOUCH SENSORS

Curved Sensors

	Product Number	Overall Dimension	Sensor Diagonal	Pattern to Pattern Dimension***	Recommended Viewing Area	Radius of Curvature
	13-092x-01**	5.61"x 8.27"	10.18"	6.03"x 7.73"	5.22"x 6.92"	16.3"
7"	13 096x-01	6.85"x 8.44"	10.87"	6.16"x 7.76"	5.34"x 6.94"	17.1"
	13-097x-01	6.22"x 8.21"	10.30"	5.71"x 7.71"	5.04"x 6.81"	17.0"
to	13-121x-01	7.86"x10.34"	1 2.47"	7.23"x 9.71"	6.24"x 8.72"	25.0"
	13-122x-01	8.57"x10.34"	13.14"	7.70"x 9 67"	6.68"x 8.65"	25.0"
14"	13-123x-01	8.50"x11.25"	13.56"	7.81"x10.56"	6.73"x 9.48"	25.0"
	13-131x-01	8.91"x11.39"	13.97"	8.10"x10.58"	7.00"x 9.48"	56.0"
	13-132x-01	9.34"x12.15"	14.75"	8.66"x11.47"	7.48"x10.29"	22.6"
	13-141x-01	9.15"x11.25"	14.10"	8.32"x10.52"	7.21"x9.41"	26.0"
	13-133x-01	9.44"x12.10"	14.94"	8.68"x11.34"	7.50"x10.16"	52.0"
	13-143x-01	9.88"x12.40"	15.44"	9.08"x11.60"	7.87"x10.39"	50.0"
	13-144x-01	10.12"x12.80"	16.12"	9.33"x12.08"	8.07"x10.82"	25.0"
	13-145x-01	10.00"x13.28"	16.22"	9.19"x12.47"	7.92"x11.20"	25.0"
	13-146x-01**	9.25"x12.18"	14.89"	8.41"x11.44"	7.24"x10.27"	26.0"
	13-151x-01	9.50"x12.25"	15.50"	8.60"x11.35"	7.43"x10.18"	46.0"
15"	13-152x-01**	9.98"x12.65"	16.11"	9.18"x11.85"	7.95"x10.62"	51.0"
	13-161x-01	10 92"x14.17"	17.48"	10.04"x13.29"	8.67"x11.72"	50.0"
to	13-162x-01	11.20"x14.30"	17.96"	10.35"x13.56"	8.95"x12.16"	25.0"
	13-163x-01**	10.70"x14.10"	17.29"	9.79"x13.24"	8.44"x11.89"	46.0"
19"	13-171x-01**	11.10"x14.33"	18.13"	10.21"x13.44"	8.77"x12.00"	51.0"
	13-182x-01	11.88"x15.44"	19.48"	10.77"x14.33"	9.30"x12.86"	60.0"
	13-192x-01	12.55"x16.35"	20.31"	11.60"x15.48"	10.01"x13.89"	30.0"
	13-193x-01	13.20"x17.20"	20.20"	11.67"x15.88"	10.05"x14.26"	32.5"
	13-194x-01**	13.01"x16.44"	21.56"	11.92"x15.40"	10.32"x13.80"	31.0"
	13-201x-01	13.61"x17.23"	21.42"	12.60"x16.12"	10.91"x14.43"	32.5"
	13-202x-01	13.70"x17.40"	21.74"	12.60"x16.30"	10.90"x14.60"	60.0"

Flat Sensors

Display Diagonal	Product Number	Overall Dimension	Pattern to Pattern Dimension***	Recommended Viewing Area
9.0"- 9.8"	13-447x-01	6.50"x 9.40"	5.78"x 8.68"	4.93"x 7.83"
9.0"- 9.8"	13-440x-01	6.85"x 9.10"	6.17"x 8.42"	5.32"x 7.57"
10.1"-10.4"	13-441x-01	7.20"x 9.30"	6.49"x 8.59"	5.61"x 7.71"
10.1"-10.9"	13-442x-01	7.83"x10.10"	7.07"x 9.34"	6.10"x 8.37"
11.0"-12.0"	13-443x-01	7.48"x10.55"	6.75"x 9.82"	5.78"x 8.85"
11.3"-12.0"	13-444x-01	8.60"x11.10"	7.78"x10.28"	6.72"x 9.22"
12.2"-12.9"	1 3-445x-01	9.73" x12.23"	8.82"x11.32"	7.64"x10.14"
14.5"	13-446x-01	10.10"x13.10"	9.16"x12.16"	7.91"x10.91"

MICROTOUCH TOUCH SENSORS

SENSOR PART#	MFR PART##	PANEL SIZE	CONTROLLER PART#	MFR PART#
017X0234-001	M/T 13-1932-00-03	19"	017X0235-001	M/T 14-15
017X0238-001	M/T 13-1932-01 -03	19"	017X0239-001	M/T 14-78
017X0240-001	M/T 13-1933-01	19"	017X0241 -001	M/T 14-09
017X0246-001	M/T 13-1322-01	13"	017X0251 -001	M/T 14-78
017X0250-001	M/T 13-1612-01 -05	17"	017X0252-001	M/T 14-77
017X0255-001	M/T 13-1322-01	13"	017X0256-001	M/T 14-78
017X0259-001	M/T 13-1321 -01 -07	13"	017X0258-001	M/T 14-88
			017X0260-001	M/T 14-78

ISO 9001 REGISTERED QUALITY
certificate № 0104

WELLS-GARDNER
ELECTRONICS CORPORATION

SENSORS

ELO TOUCHSYSTEMS SENSORS

Note: Wells Gardner uses State-of-the-art technology for taping and bonding touch sensors to our monitors.

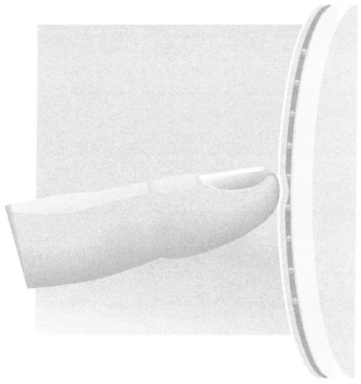

Choose AccuTouch™ Touchscreens for..

- Point-of sale -Quick service -Fine dining -Retail -Convenience stores
- Medical equipment
- Process control
- Instrumentation
- Equipment control

Unmatched Durability and Performance

Elo's patented five-wire resistive technology makes AccuTouch touchscreens unmatched for durability and accuracy.

Here's how you and your customers will benefit:

- Stable "drift-free" operation— for touch response that's always accurate.
- Highest touchpoint density in the industry for application flexibility.
  A durable surface that stands up to harsh contaminants.
- Gasket sealable.
- Fast touch response.

elo TOUCHSYSTEMS A Raychem Company

Accutouch is a registered trademark of Elo TouchSystems, Inc.

ISO 9001 REGISTERED QUALITY
certificate № 0104

ELO SENSORS

WELLS-GARDNER
ELECTRONICS CORPORATION

ISO 9001 REGISTERED QUALITY certificate № 0104

DIMENSIONS SHOWN ARE FOR REFERENCE ONLY. FOR SPECIFICS CONTACT W.G.E.C. ENGINEERING.
2701 North Kildare Avenue Chicago, Illinois 60639 Phone (773) 252-8220 Fax (773) 252-8072

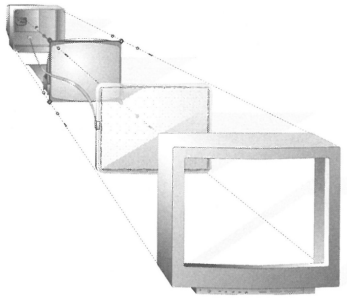

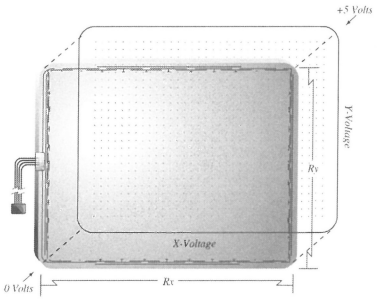

ELO INTELLITOUCH SENSORS

SENSOR PART#	MFR PART##	PANEL SIZE	CONTROLLER PART#	MFR PART#
017X0236-001	ELO E284A-191	19"	017X0237-001	ELO 012856-2V-23
017X0242-001	ELO E284A-17FST	17"		
017X0245-001	ELO E274-19	19"	017X0248-001	ELO 012856-2V-24
017X0249-001	ELO E284A-191	19"	017X0254-001	ELO 2310
017X0253-001	ELO 2804A-191	19"		
	ELO 366503-000	19" Clear		
	ELO 093691-000	19" AG		
	ELO 260573-000	17" Clear		
	ELO 431253-000	17" AG		

WELLS-GARDNER
ELECTRONICS CORPORATION

WELLS-GARDNER
MAKES FIELD REPAIRS A DREAM

GENIE-ONE

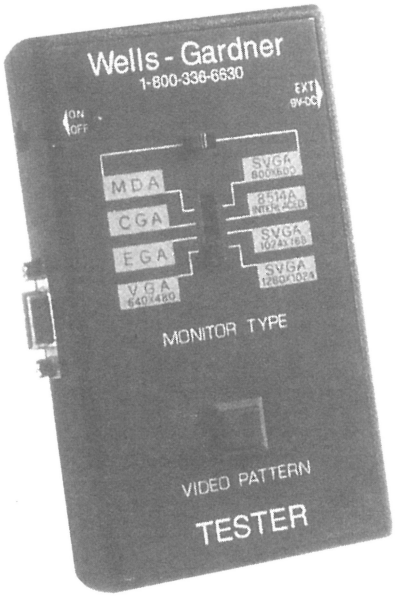

INTRODUCING GENIE-ONE, A REPAIRMAN'S DREAM MACHINE.

GENIE-ONE is a multi-signal pattern generator for testing and adjusting monitors. GENIE-ONE is light weight and portable which is
ideal for offsite or onsite repairs.

Features:

- The GENIE-ONE tests MDA, CGA, EGA, VGA 3, SVGA, 8514/A and high resolution monitors
- Multiple test patterns: color bars, crosshatch, dots, color raster (white, red, green, blue) and windows
- Two video connectors: digital/TTL 9-D and analog 15-HD
- GENIE-ONE can be powered by a 9v battery (included) or an external AC adapter
- Dimensions: 1.5" x 3.8" x 5.7"
- Weight: less than 1lbs.

WG PART No. S01G0000-000F

REGISTERED ISO 9001 QUALITY
certificate № 0104

WELLS-GARDNER
ELECTRONICS CORPORATION

PRODUCT MANUALS CROSS REFERENCE

PRODUCT MANUALS CROSS REFERENCE

Model Series	Part #	Screen Size
K7000	069X1705-100	13" & 19"
K7200	069X2847-100	13"
K7200	069X2848-100	19"
K7300	069X2894-100	13"
K7300	069X2896-100	19"
K8000	069X2346-100	
U2000	069X2631-100	
U3000	069X2815-100	14" 17" & 19"
	069X2812-100	27" VGA
	069X2926-100	33" CGA
	069X2868-100	33" EGA
	069X2876-100	33" VGA
	069X2950-100	39" CGA
Presentation	069X2796-100	27" VGA
U3100	069X2924-100	
U5000	069X2710-100	
K7400	069X2859-100	
K7500	069X2898-100	

MISC

VIDEO STAX	069X2922-100

REGISTERED ISO 9001 QUALITY
certificate № 0104

WELLS-GARDNER
ELECTRONICS CORPORATION

MID-SIZED OVER/UNDER DOORS

MID-SIZED OVER/UNDER DOOR

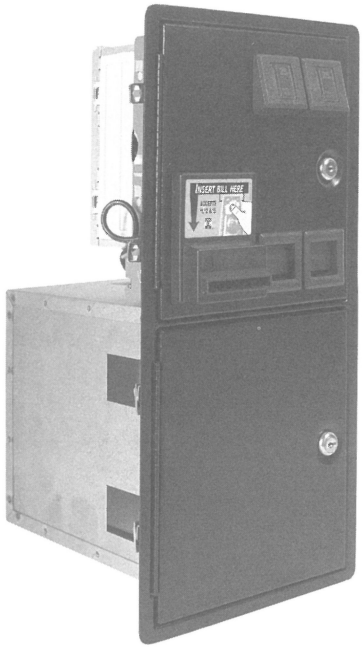

NEW! MID-SIZED OVER/UNDER COIN DOOR

Wells Gardner mid-sized coin door, manufactured in the USA, is designed with the operator in mind. This door has two coin entries and a bill validator cut-out. Like all Wells-Gardner coin doors, it is designed for maximum security and reliability. It is available for most major currencies throughout the world.

SPECIFICATIONS

- Two-entry door with cut-out for bill stacker is standard
- Security channel in frame for added protection against vandalism and theft
- Available with S7 and S10 mechanical acceptors
- Accommodates industry standard 3-1/2" mechanical coin acceptors and electronic coin validators
- Plastic cash box and steel enclosure are standard
- Powder coat paint enhances product appearance and protects against chips and finger markings
- Heavier gauge steel doors for reinforcement
- Can accommodate the Mars™ 2400 series bill validators with a 300, 500 or 700 stacker
- Can accommodate the Cash Code™ UNV bill validator with a 400 or 600 stacker.

OPTIONS

- Available with one coin entry and cut-out for Ardac ™ ABA with a 250 note stacker
- Coin meter (4.5v or 12 volt) internal steel locking bar
- Harness per customer specification
- 6, 12, or 28 volt bulbs available
- 12 volt lock-out coil available
- Available with the Mars™ 2400 series stacker for 300, 500 or 700 bills installed on the door

PART NUMBER WGD80-2105-01

REGISTERED ISO 9001 QUALITY
certificate № 0104

WELLS-GARDNER
ELECTRONICS CORPORATION

MID-SIZED OVER/UNDER DOOR

ISO 9001 REGISTERED QUALITY
certificate № 0104

DIMENSIONS SHOWN ARE FOR REFERENCE ONLY. FOR SPECIFICS CONTACT W.G.E.C. ENGINEERING.
2701 North Kildare Avenue Chicago, Illinois 60639 Phone (773) 252-8220 Fax (773) 252-8072

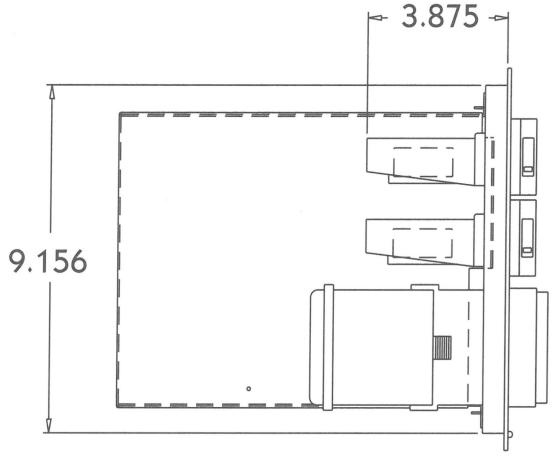

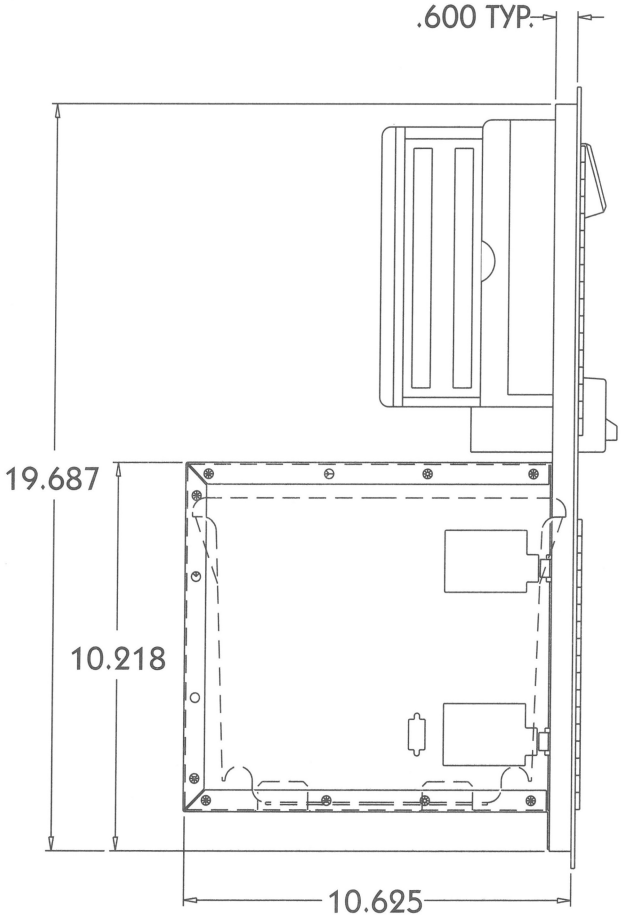

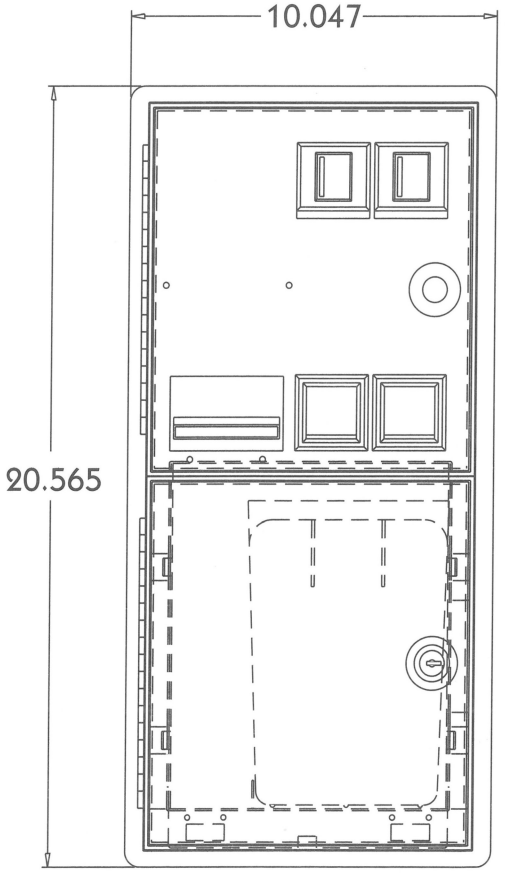

WELLS-GARDNER
ELECTRONICS CORPORATION

OVER/UNDER DOORS
DUAL ENTRY

OVER/UNDER DOORS
DUAL ENTRY

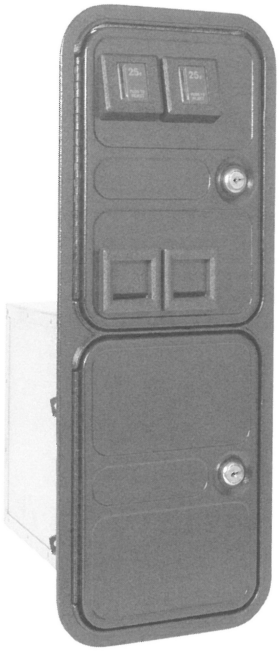

Wells-Gardner coin doors, manufactured in the U.S.A., are designed for maximum security and reliability. They are available for most major currencies throughout the world. The coin acceptor and cashbox have separate access doors which allow for easy maintenance and cash collection. For added security, only authorized personnel can open the cashbox door. The over/under coin door is used extensively in the amusement market on video games.

SPECIFICATIONS

- Security channel in frame for added protection against vandalism and theft
- Available with S7 and S10 mechanical acceptors
- Accommodates industry standard 3 1/2" mechanical coin acceptors and electronic coin validators
- Plastic cashbox and steel enclosure are standard
- Powder coat paint enhances product appearance and protects against chips and markings

OPTIONS

- Coin meter (4.5volt or 12 volt)
- Steel locking bar
- Harness per customer specification
- 6, 14, or 28 volt bulbs available
- 12 volt lock-out coil available
- One-entry, upper door only, for a Mars™ bill acceptor AE2400 with a 300 or 500 stacker
  Part# 891-4000-01

"Stacker-Ready" Two-Entry Coin Door WGD10-1110-01

This door can be ordered complete as a "stacker-ready" door. The frame and the cashbox enclosure come modified for a stacker. The upper door can be easily removed and replaced with a one-entry door that can accommodate a Mars™ bill acceptor AE2400 with a 300 or 500 stacker.

ISO 9001 REGISTERED QUALITY
certificate № 0104

OVER / UNDER
DUAL ENTRY COIN DOOR

WELLS-GARDNER
ELECTRONICS CORPORATION

ISO 9001 REGISTERED QUALITY certificate № 0104

2701 North Kildare Avenue Chicago, Illinois 60639 Phone (773) 252-8220 Fax (773) 252-8072

	STOCK NO.	DESCRIPTION
1)	**812-4050-XX**	S-10 Acceptor
	812-4150-011	S-7 U.S. 25¢
2)	**820-4177-00**	Plastic Cashbox
3)	**820-4189-00**	Steel Enclosure
4)	**890-1002-00**	Hinge Screw
5)	**890-1003-00**	Clamp Screw
6)	**890-1017-00**	Screw Bezel Nylon
7)	**890-1206-02**	#4-40 Kep Nut
8)	**890-1300-00**	Keyhook
9)	**891-0508-16**	Frame
10)	**891-0506-00**	Clamp
11)	**891-0547-00**	Double D Cam Lock
12)	**891-0603-16**	Black Mini Door
13)	**891-0604-16**	2 Entry Upper Door
14)	**891-1008-039**	Lockout Bracket
15)	**891-1008-107**	Baseplate Assembly
16)	**891-1109-16**	Black Reject Flap Nylon
17)	**891-1113-01**	Entry/Reject Button 25¢
18)	**891-1117-00**	Lampholder
19)	**891-1121-00**	Entry/Reject Button Spring
20)	**891-1118-00**	6V Lamp Wedge Base
21)	**891-1311-16**	Black Button Bezel
22)	**891-1312-16**	Black Reject Bezel
23)	**891-2125-00**	12V Lockout Coil Assembly
24)	**891-2216-16**	Microswitch Assembly
24A)	**890-1007-00**	Microswitch Screw
24B)	**890-1206-02**	#4-40 Kep Nut
24C)	**891-1105-01**	Reject Cup Side Plate
24D)	**891-1106-00**	Reject Cup Base Plate
24E)	**891-1107-00**	Microswitch Bracket
24F)	**891-1110-00**	Coin Adjuster
24G)	**891-1116-16**	Black Microswitch
	891-1116-11	White Microswitch
	891-1116-10	Red Microswitch
24H)	**891-1125-00**	Microswitch Plastic Cover
24J)	**892-1002-07**	Snap On Clip
24K)	**892-1002-08**	Elastic Lock Nut
24L)	**892-1002-09**	Snap On Sleeve
24M)	**890-1007-00**	Microswitch Screw
25)	**892-1002-01**	Coin Inlet Lamp Side
26)	**892-1002-021**	Coin Inlet Cover Side
27)	**892-1002-10**	Hold Down Bracket
28)	**823-1011-00**	12V DC Meter
	823-1103-00	4.5V DC Meter
29)	**890-1032-01**	Meter & Lockout Screw
30)	**822-1400-00**	Locking Bar
31)	**890-1019-00**	3/4" Lockwasher

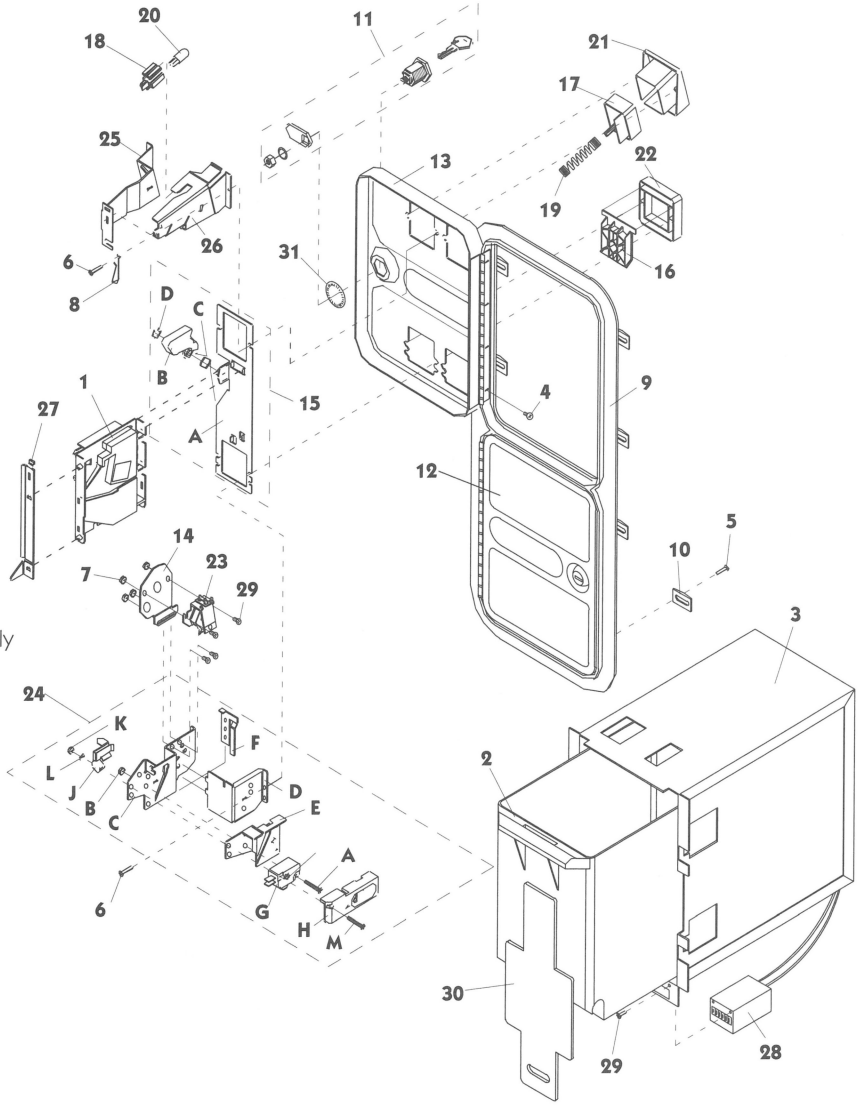

WELLS-GARDNER
ELECTRONICS CORPORATION

OVER/UNDER DOORS
FOR BILL VALIDATORS

OVER/UNDER DOORS FOR BILL VALIDATORS

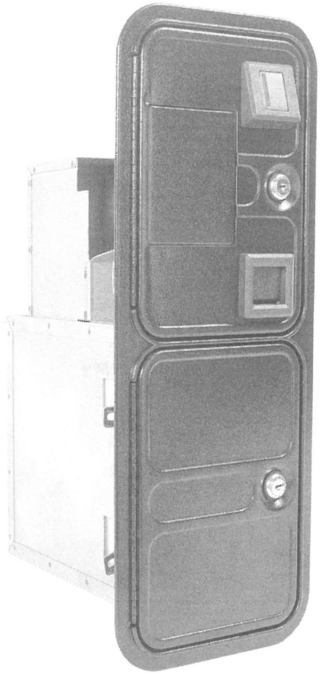

Wells-Gardner coin doors, manufactured in the U.S.A., are designed for maximum security and reliability. They are available for most major currencies throughout the world. The over/under coin door is used extensively in the amusement market on video games.

SPECIFICATIONS

- Available with S7 and S10 mechanical acceptors
- Accommodates industry standard 3 1/2" mechanical coin acceptors and electronic coin validators
- Plastic cashbox and steel enclosure are standard
- Powder coat paint enhances product appearance and protects against chips and markings

OPTIONS

- Coin meter (4.5volt or 12 volt)
- Steel locking bar
- Harness per customer specification
- 6, 14, or 28 volt bulbs available
- 12 volt lock-out coil available
- Upper door with two coin entries
  Part# 891-4110-09

"Stacker" Ready Door WGD10-1117-10

This door is available with a cut-out to accommodate a Mars™ bill acceptor AE2400 with a 300 or 500 stacker. It comes with an industry standard S7 U.S. 25¢ acceptor.

"Stackerless" Ready Door WGD10-1110-DBV

This door accommodates a non-stacking bill validator. It has a metal chute which attaches on top of the cashbox enclosure. Bills are fed from the validator into the chute and fall into the cashbox.

ISO 9001
certificate № 0104

OVER / UNDER FOR BILL VALIDATORS

WELLS-GARDNER
ELECTRONICS CORPORATION

ISO 9001 REGISTERED QUALITY certificate № 0104

2701 North Kildare Avenue Chicago, Illinois 60639 Phone (773) 252-8220 Fax (773) 252-8072

	STOCK NO.	DESCRIPTION
1)	**812-4050-XX**	S-10 Acceptor
	812-4150-011	S-7 U.S. 25¢ Acceptor
2)	**820-4177-00**	Plastic Cash Box
3)	**820-4189-00**	Stacker Enclosure for Mars™ 2411
4)	**890-1051-00**	Plastic Spacer
5)	**890-1002-00**	Hinge Screw
6)	**890-1003-00**	Clamp Screw
7)	**890-1017-00**	Bezel Nylon Screw
8)	**890-1019-00**	3/4" Lock Washer
9)	**890-1209-00**	#8-32 Kepnut
10)	**890-1300-00**	Keyhook
11)	**891-0100-4016**	Cover Plate
12)	**891-0506-00**	Clamp
13)	**891-0509-16**	Stacker Ready Frame
14)	**891-0547-00**	Double D Cam Lock
15)	**891-0603-16**	Blank Mini Door
16)	**891-0609-16**	Stacker Ready Door
17)	**891-1008-108**	Base Plate Assembly
18)	**891-1109-16**	Black Reject Flap
19)	**891-1113-01**	Entry/Reject Button 25¢
20)	**891-1117-00**	Lampholder
21)	**891-1118-00**	6V Lampwedge
	891-1219-00	14V Lampwedge
	891-1318-00	28V Lampwedge
22)	**891-1121-00**	Entry/Reject Button Spring
23)	**891-1311-16**	Black Button Bezel
24)	**891-1312-16**	Black Reject Bezel
25)	**891-2216-03**	Microswitch Assembly
26)	**891-3015-01**	Bridge Pin
27)	**892-1002-01**	Lampside Bracket
28)	**892-1002-021**	Coverside Bracket
29)	**892-1002-04**	Hold Down Bracket
30)	**822-1400-00**	Locking Bar (Optional)
31)	**890-1032-01**	Meter & Lockout Screw (Optional)
32)	**823-1011-00**	12 VDC Meter (Optional)
	823-1103-00	4.5 VDC Meter (Optional)
33)	**890-1206-02**	#4-40 Kepnut
34)	**890-2125-11**	Lockout Coil (Optional)

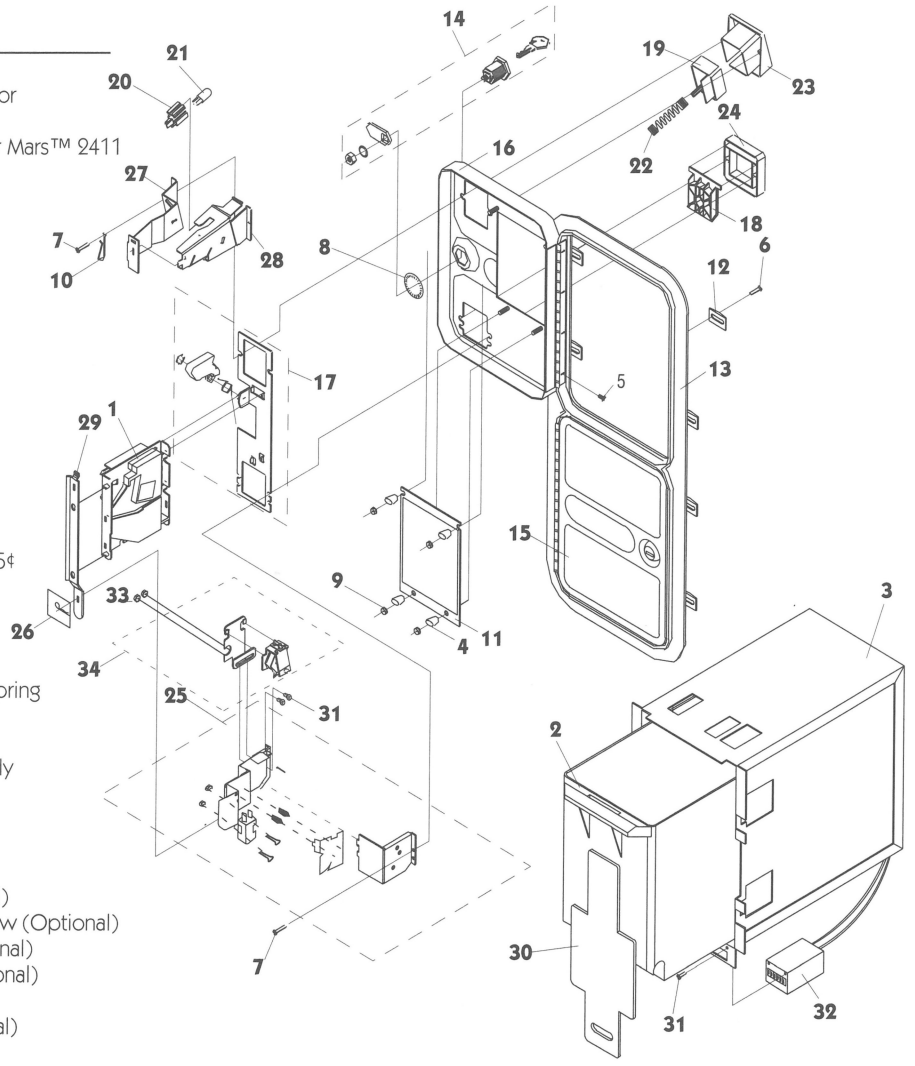

WELLS-GARDNER
ELECTRONICS CORPORATION

OVER/UNDER STACKERLESS BILL VALIDATOR READY

ISO 9001 REGISTERED QUALITY certificate № 0104

2701 North Kildare Avenue Chicago, Illinois 60639 Phone (773) 252-8220 Fax (773) 252-8072

	STOCK NO.	DESCRIPTION
1)	**812-4050-XX**	S-10 Acceptor
	812-4150-011	S-7 U.S. 25¢ Acceptor
2)	**820-4177-00**	Plastic Cash Box
3)	**820-4184-01**	Enclosure DBV Stackerless
4)	**820-4185-01**	Chute and Hardware
5)	**890-1002-00**	Hinge Screw
6)	**890-1003-00**	Clamp Screw
7)	**890-1017-00**	Bezel Nylon Screw
8)	**890-1019-00**	3/4" Lock Washer
9)	**890-1209-00**	#8-32 Kepnut
10)	**890-1300-00**	Keyhook
11)	**891-0100-2016**	Cover Plate
12)	**891-0506-00**	Clamp
13)	**891-0509-16**	Stacker Ready Frame
14)	**891-0547-00**	Double D Cam Lock
15)	**891-0603-16**	Blank Mini Door
16)	**891-0606-16**	Stacker Ready Door
17)	**891-1008-108**	Base Plate Assembly
18)	**891-1109-16**	Black Reject Flap
19)	**891-1113-01**	Entry/Reject Button 25¢
20)	**891-1117-00**	Lampholder
21)	**891-1118-00**	6V Lampwedge
	891-1219-00	14V Lampwedge
	891-1318-00	28V Lampwedge
22)	**891-1121-00**	Entry/Reject Button Spring
23)	**891-1311-16**	Black Button Bezel
24)	**891-1312-16**	Black Reject Bezel
25)	**891-2216-03**	Microswitch Assembly
26)	**891-3015-01**	Bridge Pin
27)	**892-1002-01**	Lampside Bracket
28)	**892-1002-021**	Coverside Bracket
29)	**892-1002-04**	Hold Down Bracket
30)	**822-1400-00**	Locking Bar (Optional)
31)	**890-1032-01**	Meter & Lockout Screw (Optional)
32)	**823-1012-00**	12 VDC Meter (Optional)
	823-1016-00	4.5 VDC Meter (Optional)
33)	**891-0100-10**	Plate for MARS VFM2
34)	**890-1206-02**	#4-40 Kepnut
35)	**891-1008-041**	Lockout Coil Bracket, DBV (optional)
36)	**891-2125-00**	12V Lockout Coil (Optional)

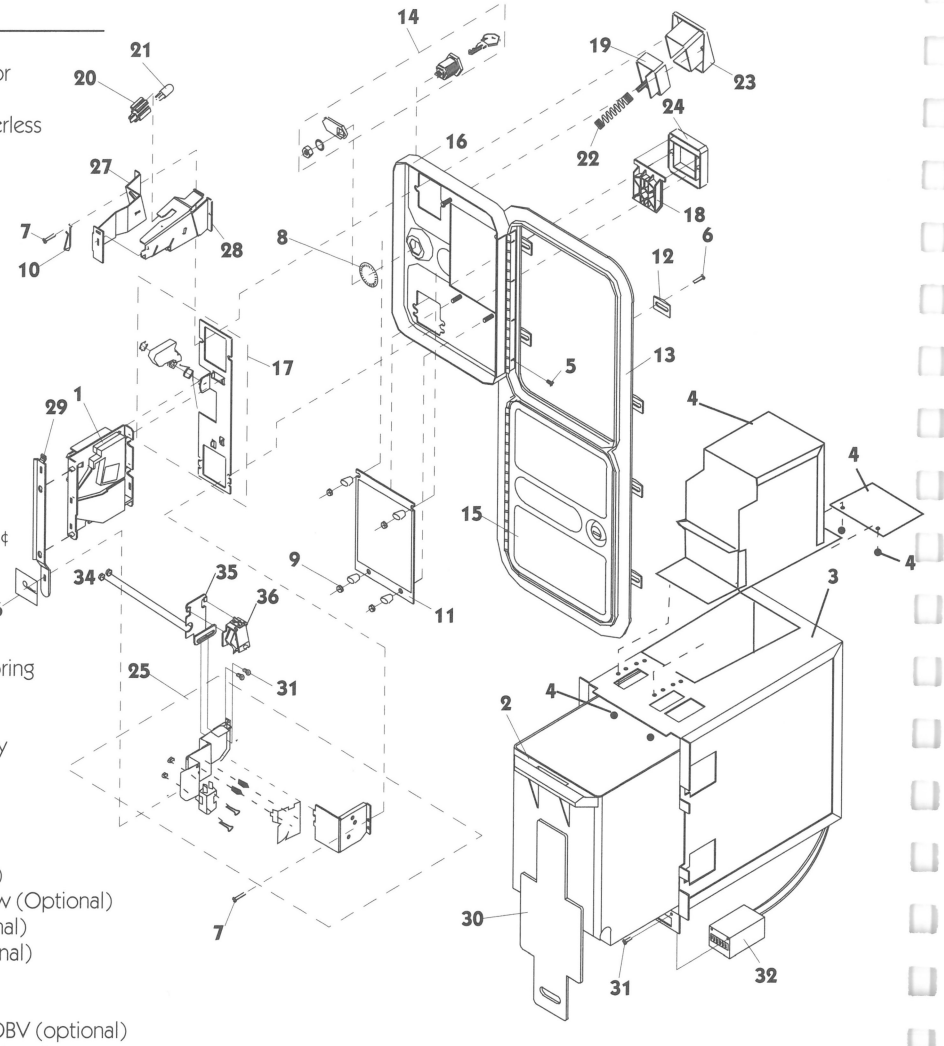

WELLS-GARDNER
ELECTRONICS CORPORATION

OVER/UNDER DOOR CUT-OUT

ISO 9001 REGISTERED QUALITY certificate № 0104

DIMENSIONS SHOWN ARE FOR REFERENCE ONLY. FOR SPECIFICS CONTACT W.G.E.C. ENGINEERING.
2701 North Kildare Avenue Chicago, Illinois 60639 Phone (773) 252-8220 Fax (773) 252-8072

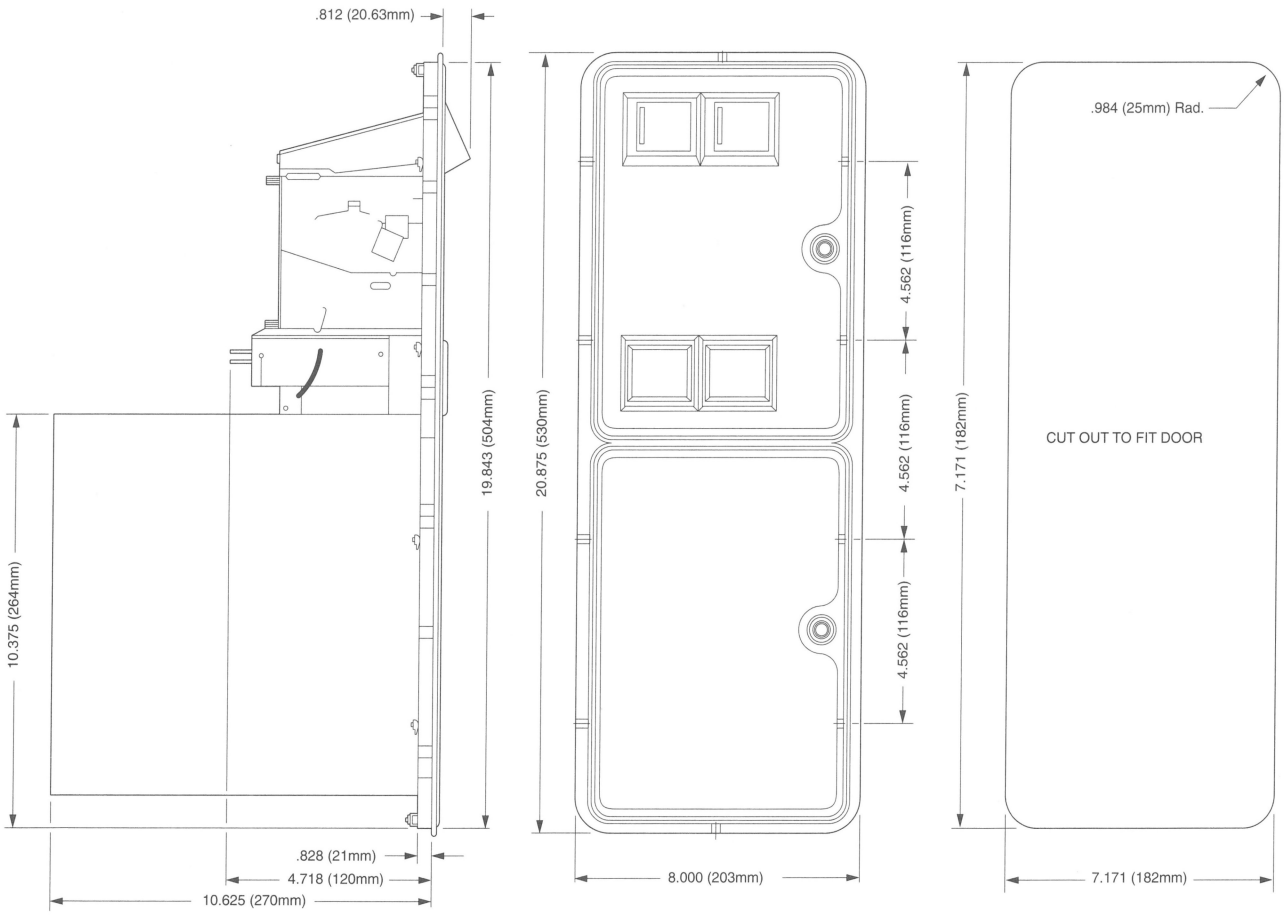

WELLS-GARDNER
ELECTRONICS CORPORATION

INTERCHANGEABLE OVER/UNDER DOORS

INTERCHANGEABLE OVER/UNDER DOORS

WGD 91-4000-02

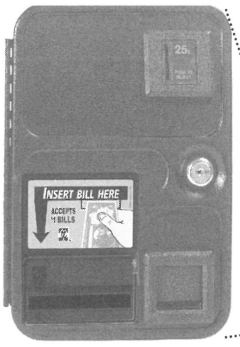

UPPER MINI door only
- 1 Coin Entry
- Validator Cutout for use with a MARS™300 + 500 STACKER unit
- S7 U.S. $ .25 coin acceptor

WGD 91-4110-09

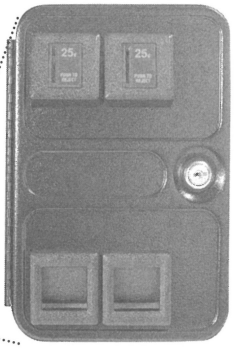

UPPER MINI DOOR only
- 2 Coin Entries
- 2 S7 U.S. $ .25 coin acceptor

INTERCHANGEABLE OVER/UNDER COIN DOORS

This coin door will allow operators to easily change the configuration of their coin door by simply removing the upper mini door only. This new concept has special cut outs in the frame and enclosure that permit for this versatility. This door is available as a 2 entry door or I entry door with a Dollar Bill Validator cut-out that will accommodate the Mars 241 1 and 2451 upstacker.

ISO 9001 REGISTERED QUALITY
certificate № 0104

WELLS-GARDNER
ELECTRONICS CORPORATION

BACK CHANNEL ASSEMBLIES

BACK CHANNEL ASSEMBLY

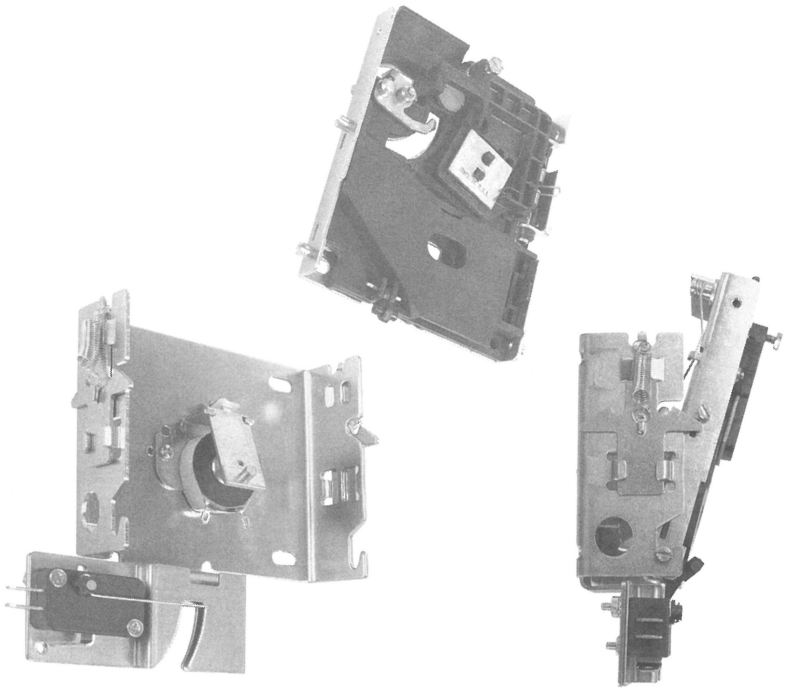

- Mounting bracket for industry standard 3 1/2" mechanical and electronic coin acceptors
- Easy snap-in/ snap-out design
- Lockout coil optional
- Vertical or horizontal mount microswitch

Part Number WGD91-7000-00

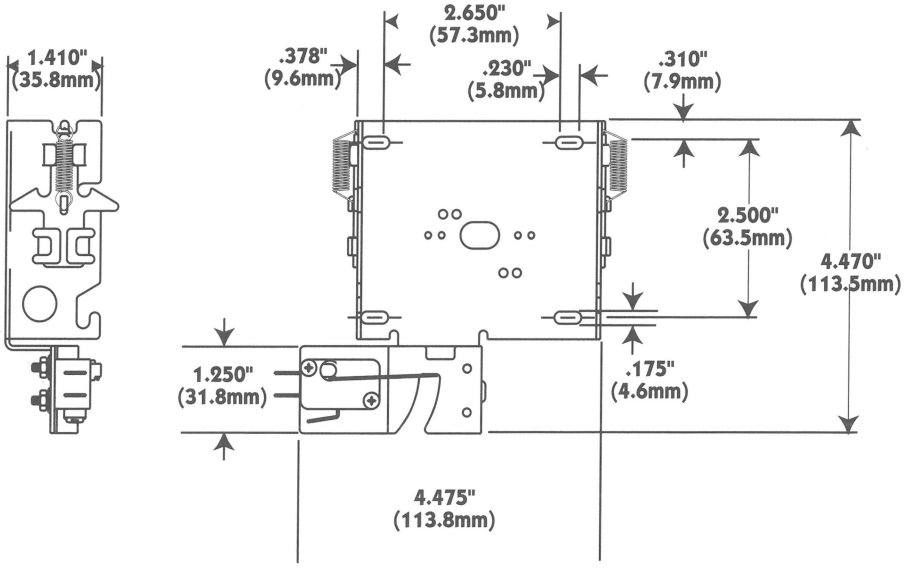

ISO 9001
certificate № 0104

WELLS-GARDNER
ELECTRONICS CORPORATION

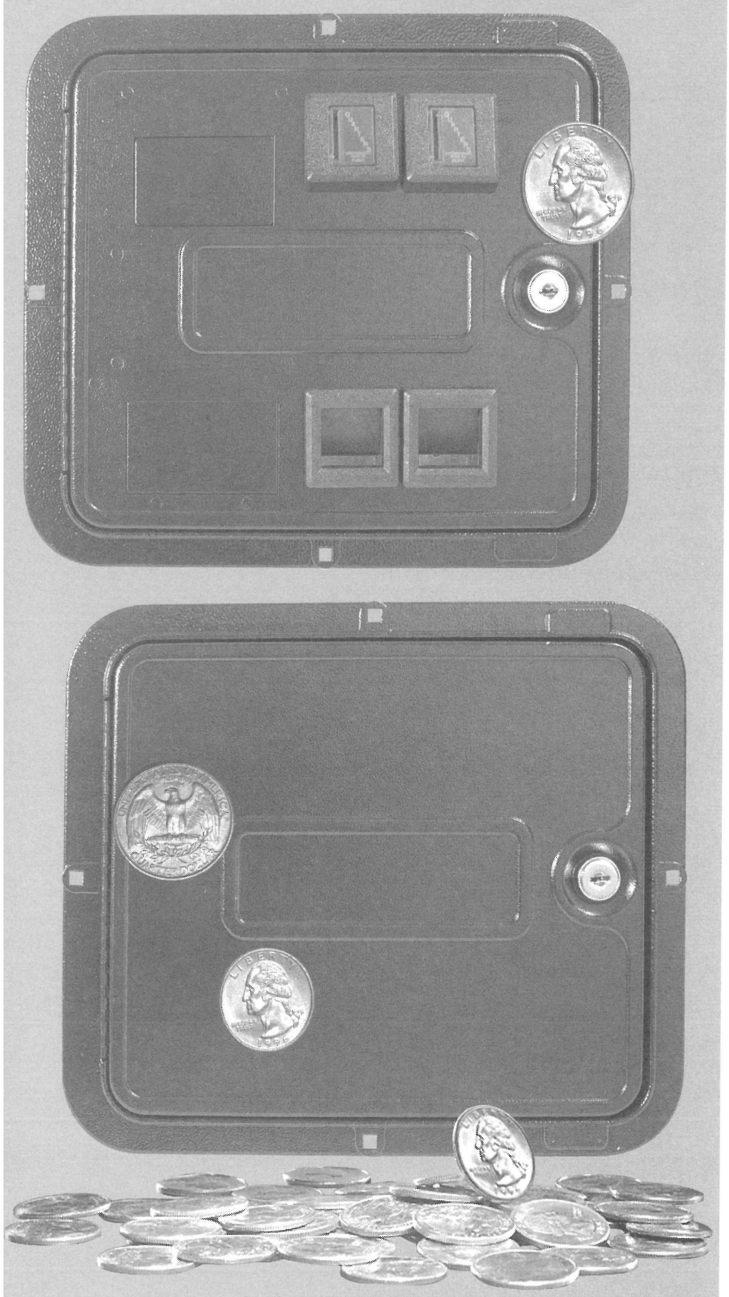

STANDARD DOOR II: WIDE-BODIED DOOR

Wells-Gardner coin doors, manufactured in the U.S.A., give maximum security and reliability. They are available for most major currencies throughout the world. The wide-bodied Standard Door II is widely used in the amusement market for pinball and upright video games.

SPECIFICATIONS

- Security channel in frame for added protection against vandalism and theft
- Available with S7 or S10 mechanical acceptors
- Accommodates industry standard 3 1/2" mechanical coin acceptors and electronic coin validators
- Powder coat paint enhances product appearance and protects against chips and markings

OPTIONS

- Available in one, two, or three entries
- The two entry "Universal" door is available with two bill validator cut-outs
  - The top cut-out accommodates industry standard stackerless bill validators
  - The bottom cut-out accommodates a Mars™ bill acceptor AE2400 with a 300 or 500 stacker
- Harness per customer specification
- Slam switch
- 6, 14, or 28 volt bulbs available
- Blank access door available
- 12v lock-out coil available

2 Entry Universal Door with bill validator cut outs and two S7 U.S. Quarter acceptors — Part Number WGD10-4350-002

Blank Door — Part Number WGD21-4350-00

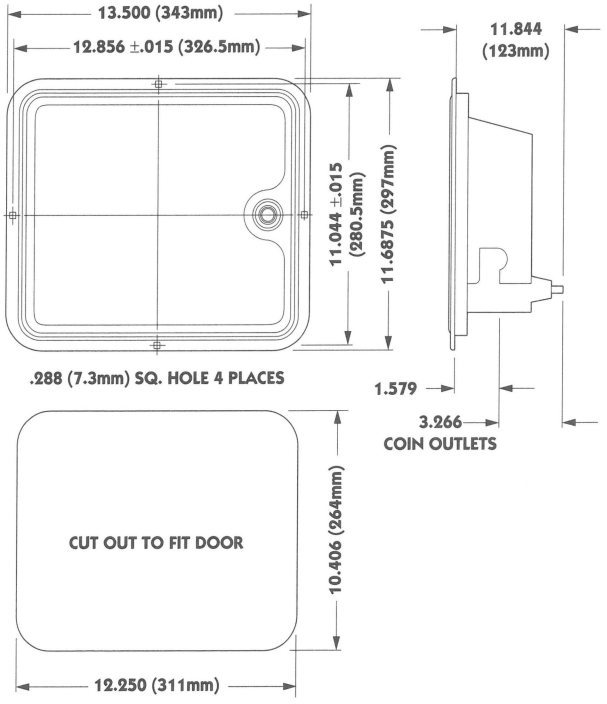

WELLS-GARDNER
ELECTRONICS CORPORATION

STANDARD DOOR II:
WIDE-BODIED DOOR

ISO 9001 REGISTERED QUALITY certificate № 0104

2701 North Kildare Avenue Chicago, Illinois 60639 Phone (773) 252-8220 Fax (773) 252-8072

	STOCK NO.	DESCRIPTION
1)	890-1002-00	Screw Hinge
2)	890-1017-00	Screw, Trilobular
3)	890-1209-00	Kep Nut, #8-32
4)	890-1300-00	Keyhook
5)	891-0100-7116	Lower Cover Plate
6)	891-0546-00	Lock, Double Bit
	891-0547-00	Double D Cam Lock
7)	891-1008-107	Base Plate Assembly
8)	891-1109-16	Reject Flap Black
9)	891-1113-01	Entry/Reject Button $.25
10)	891-1117-00	Lampholder
11)	891-1118-00	Lamp Wedge Base 6V
	891-1219-00	14V Lamp Wedge
	891-1318-00	28V Lamp Wedge
12)	891-1121-00	Spring, E/R Button
13)	891-1311-16	Button Black Bezel
14)	891-1312-16	Black Reject Bezel
15)	891-1701-16	Frame, Std Door II Black
16)	891-1730-168	Std Door II, 2 Entry W/DBV
17)	891-2216-16	Microswitch Assembly
17A)	890-1007-00	Screw Flat Head M/S
17B)	890-1206-02	Kep Nut # 4-40
17C)	891-1105-01	Reject Cup Side Plate
17D)	891-1106-00	Reject Cup Base Plate
17E)	891-1107-00	Microswitch Bracket
17F)	891-1110-00	Coin Adjuster
17G)	891-1116-16	Black Microswitch
17H)	891-1125-00	Plastic Cover Plastic
17J)	892-1002-07	Snap-On Clip
17K)	892-1002-08	Elastic Lock Nut
17L)	892-1002-09	Snap-On Sleeve
17M)	892-1002-11	Pan Head Screw
18)	892-1002-01	Lampside Bracket
19)	892-1002-021	Coverside Bracket
20)	892-1002-10	Hold Down Bracket
21)	891-0100-6016	Upper Cover Plate
22)	812-4150-011	S-7 Coin Acceptor
	812-4050-XX	S-10 Coin Acceptor (Optional)
23)	890-1051-00	Plastic Spacer
24)	890-1019-00	3/4" Lock Washer

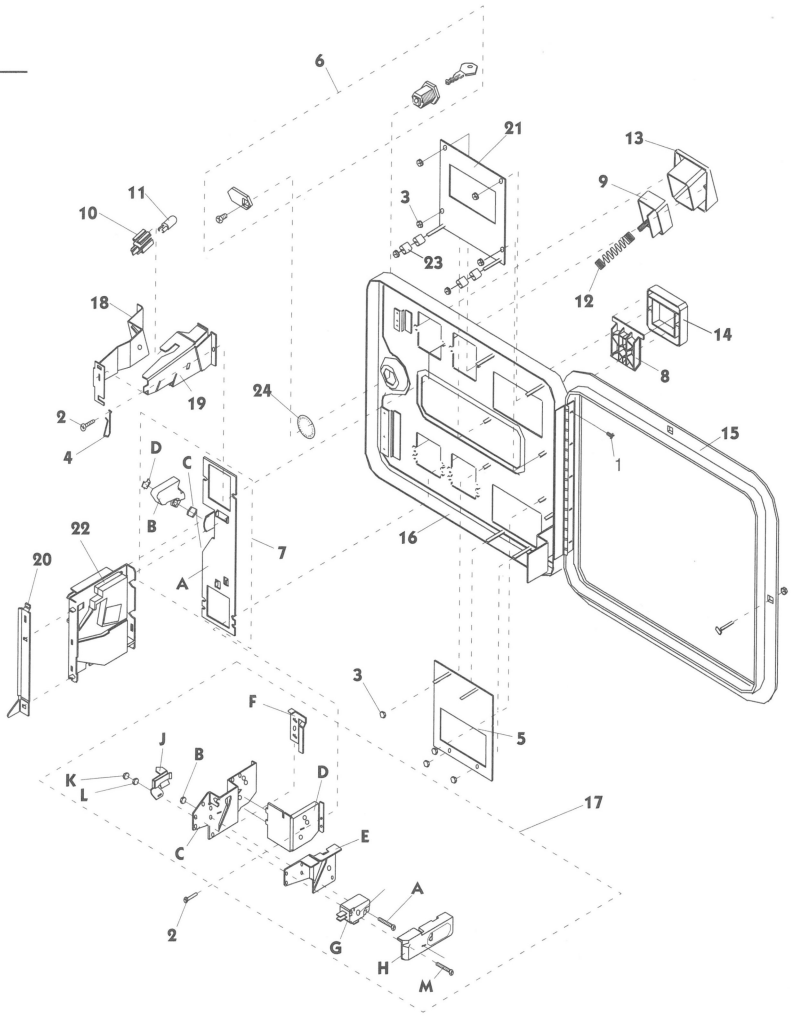

WELLS-GARDNER
ELECTRONICS CORPORATION

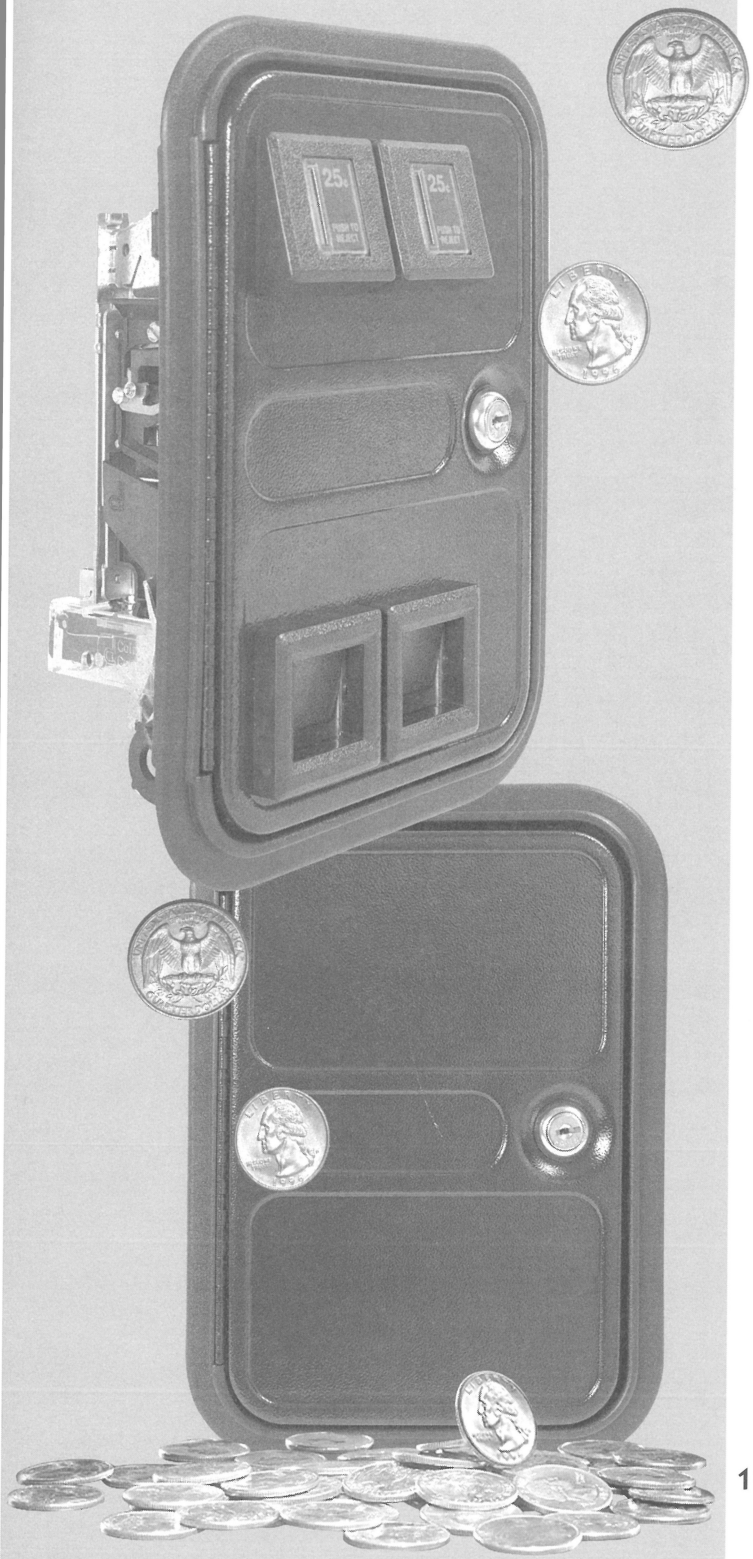

MINI DOORS

Wells-Gardner mini door is suitable for those applications that require a smaller coin door.

SPECIFICATIONS

- Available with S7 or S10 mechanical acceptors
- Accommodates industry standard 3 1/2 " mechanical coin acceptors and electronic coin validators
- Powder coat paint enhances product appearance and protects against chips and markings

OPTIONS

- Available with two entries or one entry, which accommodates a Mars™ bill acceptor AE2400 with a 300 or 500 stacker
- Available in nylon or zinc frame
- Available in 6, 14, or 28 volt bulbs
- 12 volt lock out coil
- Chrome upper and lower bezels

TWO-ENTRY MINI DOOR (NYLON FRAME)	Part Number WGD10-4737-01
BLANK DOOR (NYLON FRAME)	Part Number WGD21-4137-00
BLANK DOOR (ZINC FRAME)	Part Number WGD21-4138-00

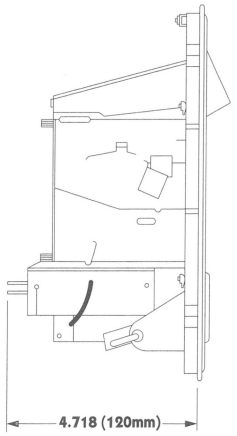

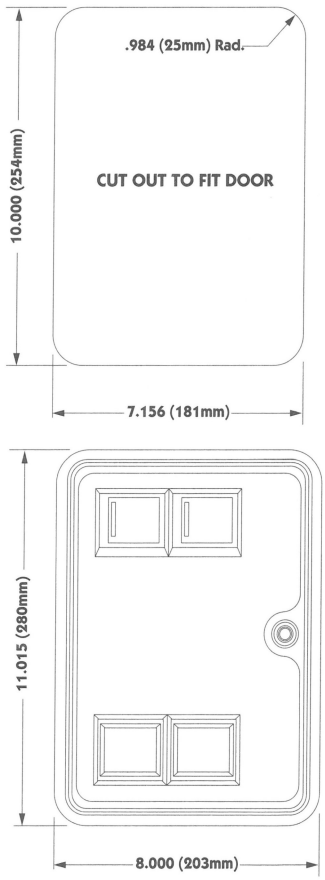

MINI DOORS

WELLS-GARDNER
ELECTRONICS CORPORATION

2701 North Kildare Avenue Chicago, Illinois 60639 Phone (773) 252-8220 Fax (773) 252-8072

	STOCK NO.	DESCRIPTION
1)	890-1017-00	Screw, Trilobular
2)	891-1008-107	Base Plate Assembly
3)	891-1117-00	Lampholder
4)	891-1118-00	Lamp Wedge Base 6 Volt
	891-1219-00	14v Lampwedge
	891-1318-00	28v Lampwedge
5)	891-2216-16	Microswitch Assembly
5A)	890-1007-00	Screw, Flat Head M/S
5B)	890-1206-02	Kep Nut #4-40
5C)	891-1105-01	Reject Cup Side Plate
5D)	891-1106-00	Reject Cup Base Plate
5E)	891-1107-00	Bracket, Microswitch
5F)	891-1110-00	Coin Adjuster
5G)	891-1116-16	Black Microswitch, -Med.
5H)	891-1125-00	Cover, Plastic
5J)	892-1002-07	Clip, Snap-On
5K)	892-1002-08	Elastic Lock Nut
5L)	892-1002-09	Sleeve, Snap-On
5M)	892-1002-11	Screw, Pan Head
6)	892-1002-01	Bracket, Lampside
7)	892-1002-021	Bracket, Coverside
8)	892-1002-10	Bracket, Hold Down
9)	812-4150-011	S-7 Coin Acceptor
	812-4050-XX	S-10 Acceptor (Optional)
10)	891-1109-16	Reject Flap Black
11)	891-1113-01	Entry/Reject Button 25¢
12)	891-1311-16	Black Button Bezel
13)	891-1312-16	Black Reject Bezel
14)	891-1121-00	Spring, E/R Button
15)	890-1206-02	#4-40 Kep Nut
16)	890-1008-041	Lockout Bracket
17)	891-2125-00	12v Lockout Coil Assy
18)	890-1032-01	Meter & Lockout Screw
20)	891-0547-00	Double D Cam Lock
21)	891-0604-16	2 Entry Mini Door
	891-0603-16	Blank Mini Door
22)	890-1032-01	Meter & Lockout Screw
23)	891-0499-16	Black Nylon Mini Frame
	891-0501-16	Black Metal Mini Frame
24)	890-1003-00	Clamp Screw
25)	891-0506-00	Clamp
26)	890-1300-00	Keyhook

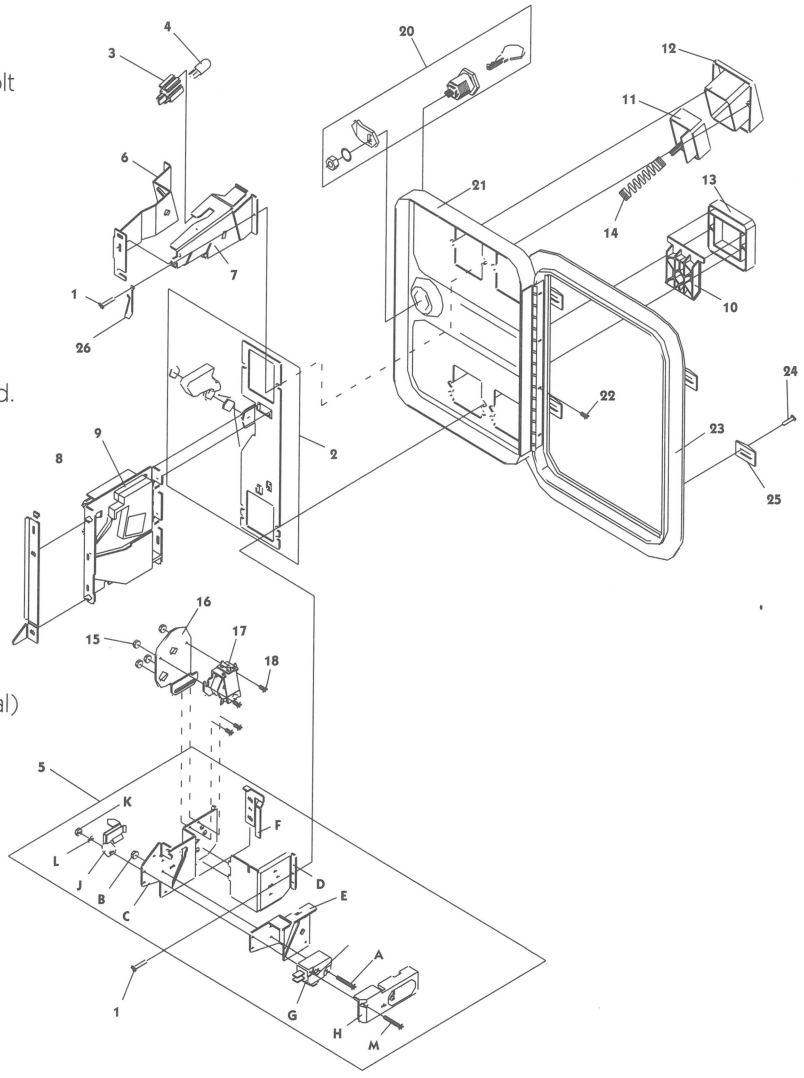

WELLS-GARDNER
ELECTRONICS CORPORATION

FRONT PLATE ASSEMBLIES

FRONT PLATE ASSEMBLIES

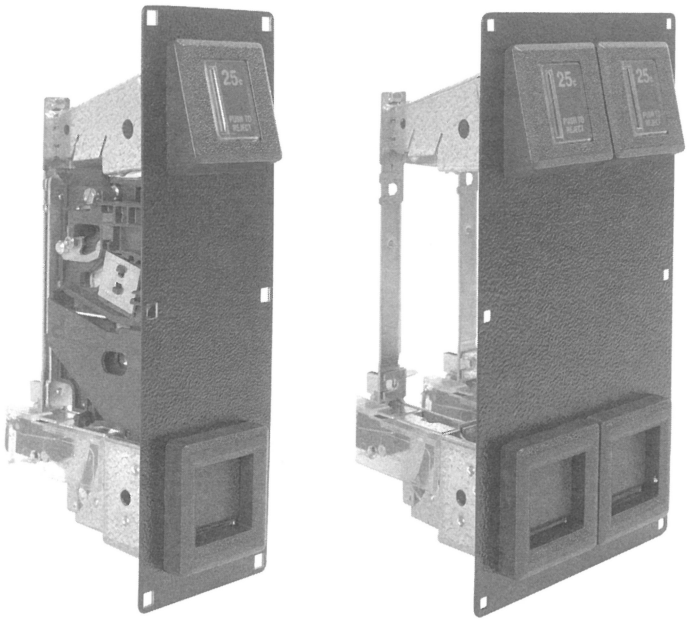

Wells-Gardner front plate assemblies accommodate industry standard 3-1/2" mechanical and electronic coin acceptors. Built-in security devices guard against fraud.

SPECIFICATIONS

- Bounce resistant microswitch
- Steel reject flap to protect coin outlet

OPTIONS

- Available in chrome or black finish
- One to four entries
- Direct or indirect reject
- 12v lock-out coil
- 6,14 or 28 volt bulb available

Single, for U.S. quarter	Part Number WGD11-4040-09
Double, for U.S. quarter	Part Number WGD11-4540-02

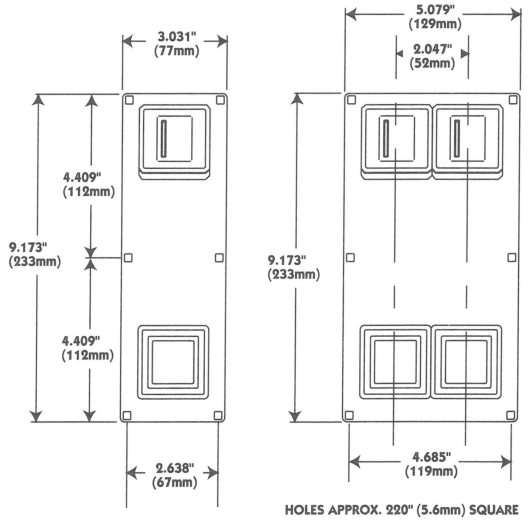

HOLES APPROX. 220" (5.6mm) SQUARE

ISO 9001 REGISTERED QUALITY
certificate № 0104

FRONT PLATE ASSEMBLIES

WELLS-GARDNER
ELECTRONICS CORPORATION

2701 North Kildare Avenue Chicago, Illinois 60639 Phone (773) 252-8220 Fax (773) 252-8072

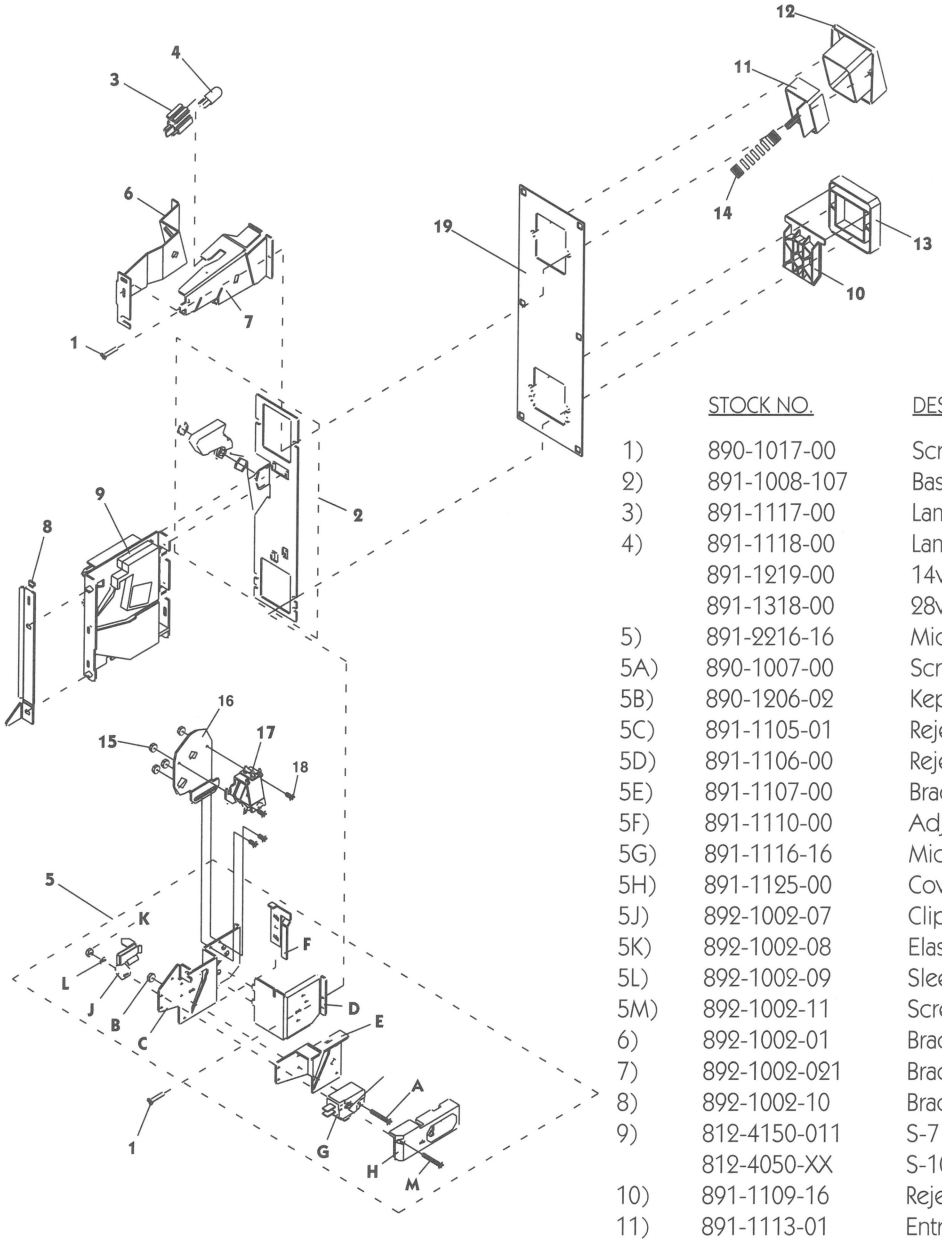

	STOCK NO.	DESCRIPTION
1)	890-1017-00	Screw, Trilobular
2)	891-1008-107	Base Plate Assembly
3)	891-1117-00	Lampholder
4)	891-1118-00	Lamp Wedge Base 6 Volt
	891-1219-00	14v Lampwedge
	891-1318-00	28v Lampwedge
5)	891-2216-16	Microswitch Assembly
5A)	890-1007-00	Screw, Flat Head M/S
5B)	890-1206-02	Kep Nut # 4-40
5C)	891-1105-01	Reject Cup Side Plate
5D)	891-1106-00	Reject Cup Base Plate
5E)	891-1107-00	Bracket, Microswitch
5F)	891-1110-00	Adjuster, Coin
5G)	891-1116-16	Microswitch, Black-Med.
5H)	891-1125-00	Cover, Plastic
5J)	892-1002-07	Clip, Snap-On
5K)	892-1002-08	Elastic Lock Nut
5L)	892-1002-09	Sleeve, Snap-On
5M)	892-1002-11	Screw, Pan Head
6)	892-1002-01	Bracket, Lampside
7)	892-1002-021	Bracket, Coverside
8)	892-1002-10	Bracket, Hold Down
9)	812-4150-011	S-7 Coin Acceptor
	812-4050-XX	S-10 Acceptor (Optional)
10)	891-1109-16	Reject Flap Black
11)	891-1113-01	Entry/Reject Button 25c
12)	891-1311-16	Button Bezel, Black
13)	891-1312-16	Reject Bezel, Black
14)	891-1121-00	Spring, E/R Button
15)	890-1206-02	#4-40 Kep Nut
16)	890-1008-041	Lockout Bracket
17)	891-2125-00	12v Lockout Coil Assy
18)	890-1032-01	Meter & Lockout Screw
19)	891-1101-16	Front Plate Black

WELLS-GARDNER
ELECTRONICS CORPORATION

TICKET DISPENSER / BILL VALIDATOR

TICKET DISPENSER / BILL VALIDATOR DOOR

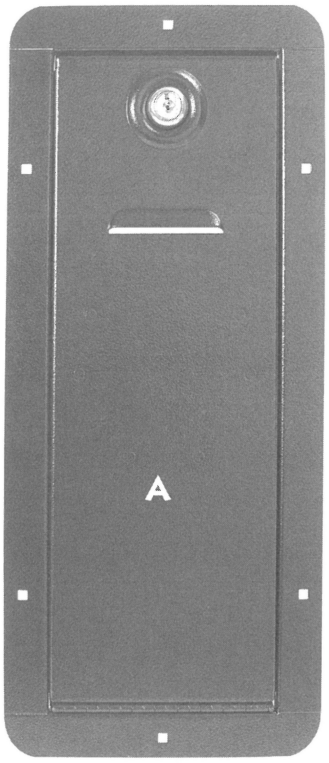

Wells-Gardner Ticket Dispenser/Bill Validator Door is available in several configurations to suite your needs. It's powder coat paint enhances appearance and protects against chips and markings.

OPTIONS

The ticket door accommodates industry standard ticket dispensers.

Available with:

- LED cut-out
- LED with wiring

OPTIONS

- The bill validator door accommodates industry standard bill validators
- Various cut-outs available depending on the bill validator being used

A. ticket dispenser door	Part Number WGD21-7102-00
B. dbv cut out	Part Number WGD21-7100-20
C. dbv cut out	Part Number WGD21-7100-21
D. dbv cut out	Part Number WGD21-7100-22
E. dbv cut out	Part Number WGD21-7100-14

ISO 9001 REGISTERED QUALITY
certificate № 0104

TICKET DISPENSER / BILL VALIDATOR DOOR

WELLS-GARDNER
ELECTRONICS CORPORATION

ISO 9001
certificate № 0104

2701 North Kildare Avenue Chicago, Illinois 60639 Phone (773) 252-8220 Fax (773) 252-8072

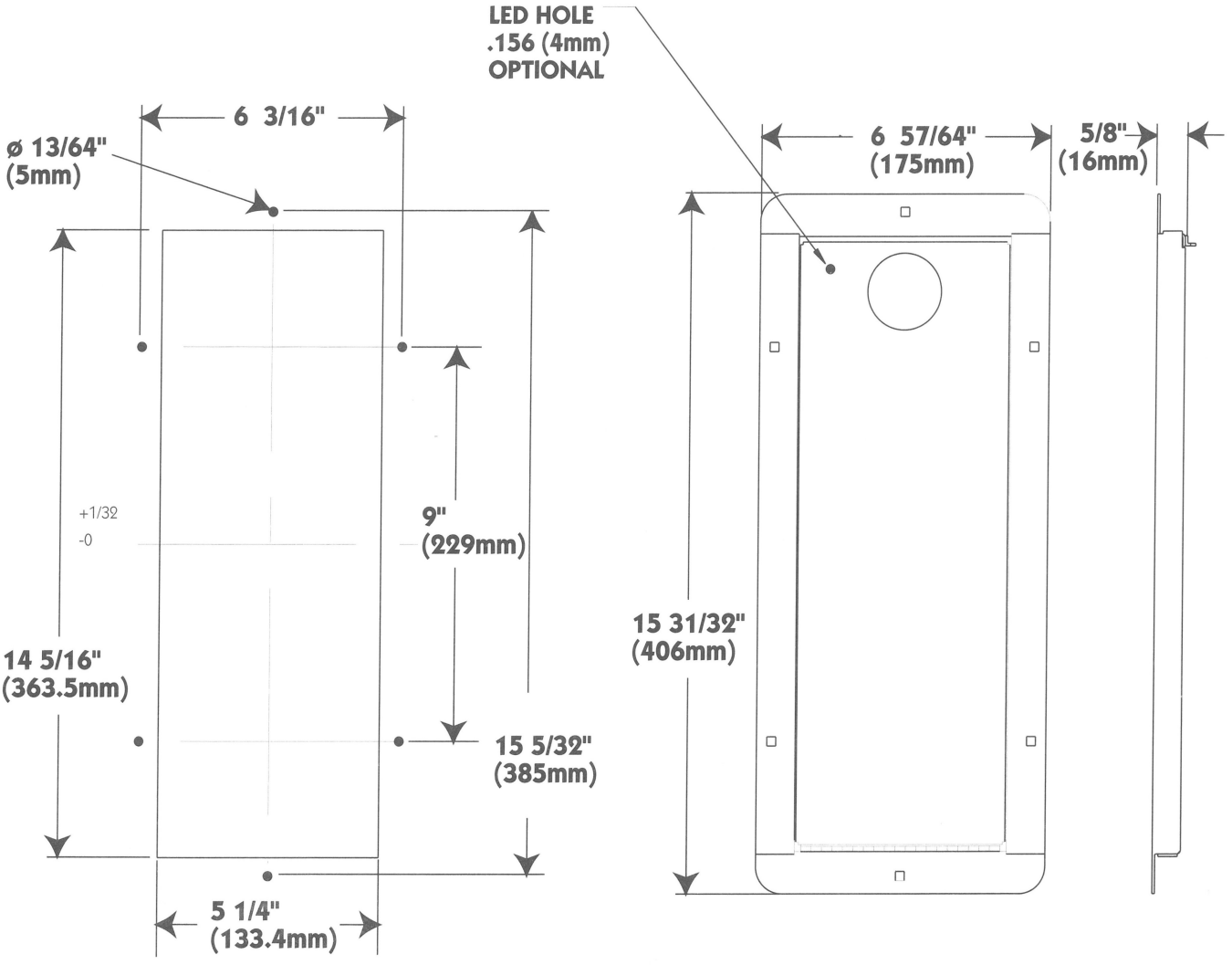

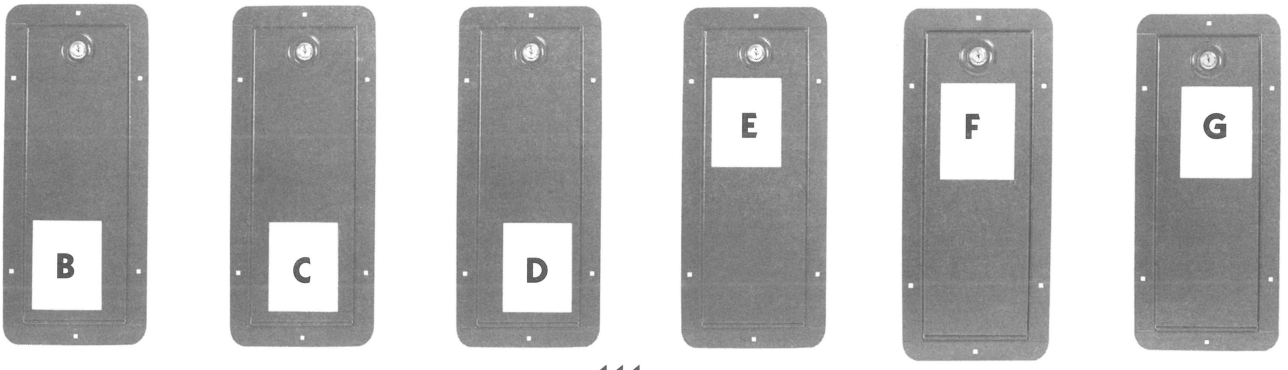

WELLS-GARDNER
ELECTRONICS CORPORATION

MECHANICAL COIN ACCEPTORS

MECHANICAL COIN ACCEPTORS

Wells-Gardner coin acceptors offer the quality and reliability you can depend on. The S7 and S10 coin acceptor are used extensively throughout the amusement market. The S1 roll-down acceptor, manufactured by Coin Controls, is compact, durable and easy to install.

THE S7 COIN ACCEPTOR

The S7 has been specifically designed for the U.S. quarter and can be manufactured for various token sizes. It can be mounted on a coin door, front plate assembly or in a back-channel assembly.

SPECIFICATIONS

- Designed for U.S. quarters
- High level of discrimination
- Checks for diameter, weight, thickness and metal content

U.S. Quarters	Part Number 812-4150-011

S10 COIN ACCEPTOR

The S10 is a single coin acceptor designed for tokens or foreign coins. This all metal acceptor offers a high level of discrimination by checking for diameter, weight, thickness and metal content. The S10 can be mounted on a coin door, plate assembly or in a Back channel assembly.

SPECIFICATIONS

- Coin or token sizes between 17mm to 30mm
- High level of discrimination
- Checks for diameter, thickness, metal content, washers and stringing

OPTIONS

- Lock-out coil assembly available

.800 token	Part Number 812-4050-96
.882 token	Part Number 812-4050-91
.900 token	Part Number 812-4050-92
.984 token	Part Number 812-4050-93
1" token	Part Number 812-4050-94
1 1/8" token	Part Number 812-4050-95
1 1/4" token	Part Number 812-4050-98
U.S. Quarters & .984 token	Part Number 812-4050-97

S1 ROLL-DOWN ACCEPTOR

The S1 roll down acceptor, manufactured by Coin Controls, is suitable for gaming, vending (car washes) and amusement(kiddie rides) applications. It is available for a wide range of tokens and foreign coins. Built-in security devices guard against fraud.

SPECIFICATIONS

- Coin or token sizes between 17mm to 30mm
- High level of discrimination
- Checks for diameter, thickness, metal content, washers and stringing

OPTIONS

- Available in one to four entries
- Standard front plate or extended front plate can be ordered with or without a lock
- Lock-out coil assembly available
- Flip/flap assembly

.800 token	Part Number 830-4060-96
.882 token	Part Number 830-4060-91
.900 token	Part Number 830-4060-92
.984 token	Part Number 830-4060-93
U.S. quarter &.984 token	Part Number 830-4061-07
1" token	Part Number 830-4060-94
1 1/8" token	Part Number 830-4060-95
U.S. quarter	Part Number 830-4060-01

REGISTERED ISO 9001 QUALITY
certificate № 0104

MECHANICAL COIN ACCEPTORS

WELLS-GARDNER
ELECTRONICS CORPORATION

2701 North Kildare Avenue Chicago, Illinois 60639 Phone (773) 252-8220 Fax (773) 252-8072

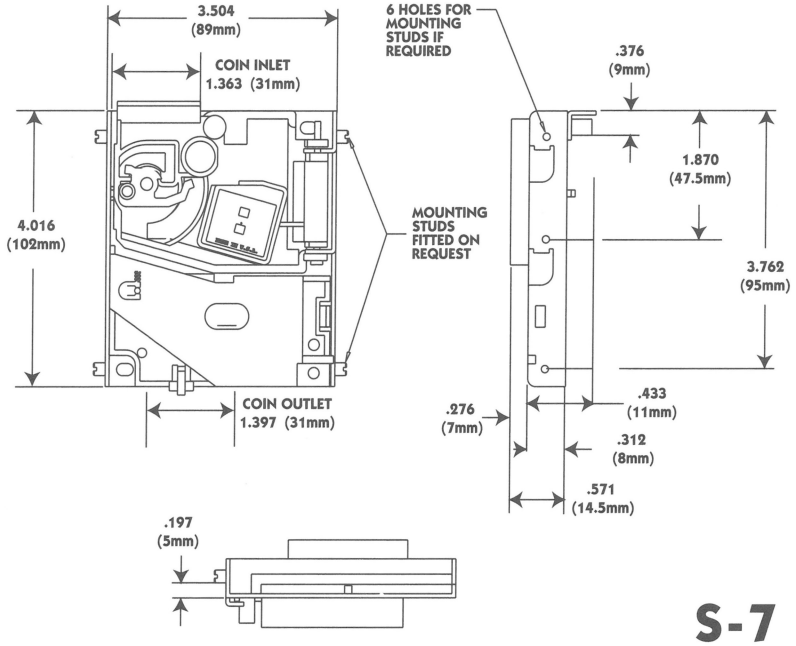

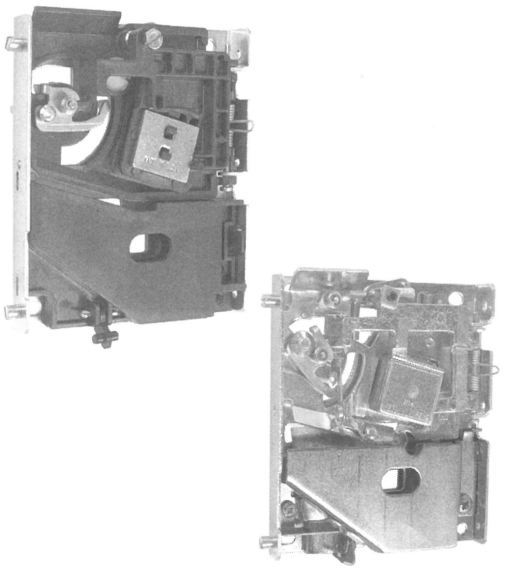

S-7 / S-10 ACCEPTOR

S-1 ACCEPTOR

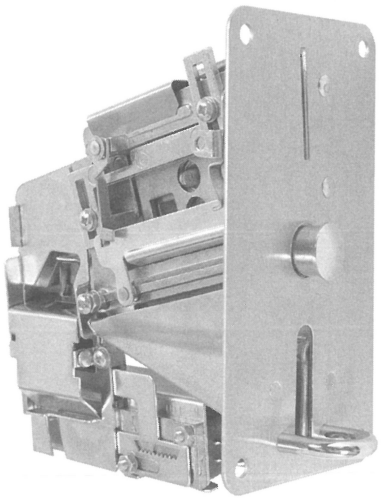

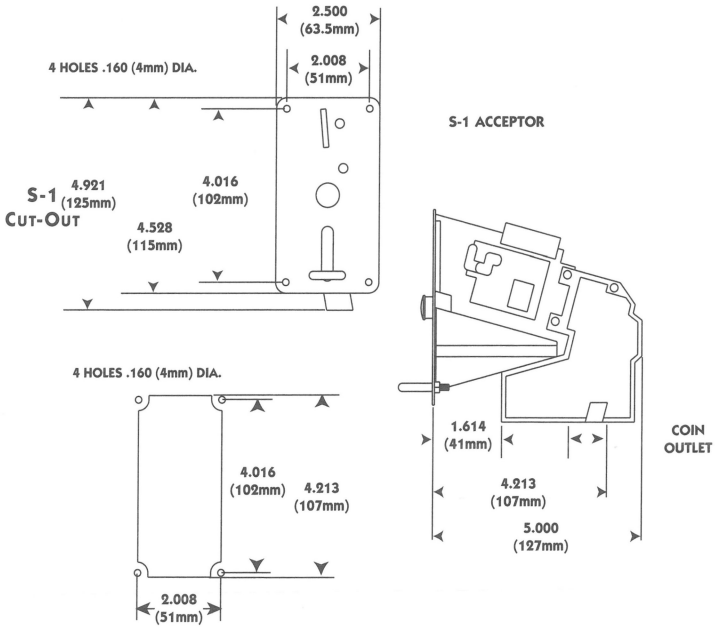

WELLS-GARDNER
ELECTRONICS CORPORATION

ACCESSORIES

ISO 9001
certificate № 0104

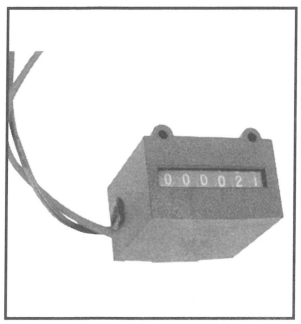

COIN COUNTERS

- 6 digit counter available in 4.5 or 12 volts

Part# 823-1103-00 4.5 volt
Part# 823-1011-00 12 volt

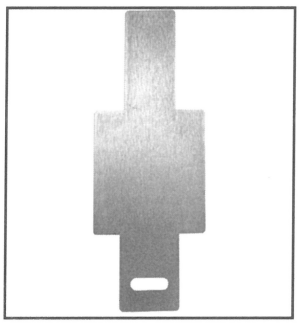

LOCKING BAR

- Steel bar designed to fit inside the cashbox enclosure of an over/under door for added security

Part Number 822-1400-00

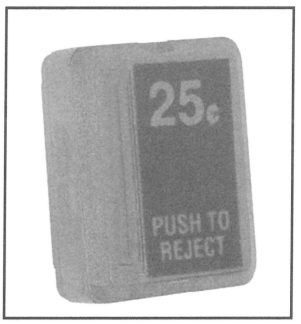

ENTRY/REJECT BUTTON

- Durable post design for longer wear
- Available with various label inserts

Part # 891-1113-01 U.S. QTR.

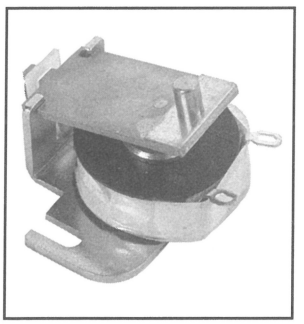

LOCK-OUT COIL ASSEMBLY

- 12 volt lock-out coil for both a one entry and two entry coin door

Part Number 891-2125-11

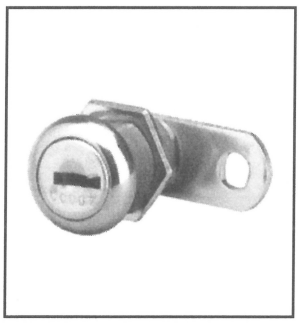

LOCKS

- Provides security against theft and vandalism
- Available in single bit, double bit or tubular

Single Bit Part # 891-0547-00
Double Bit Part # 891-0546-00
Tubular Part # 891-0548-00

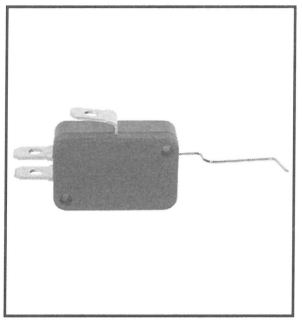

MICROSWITCHES

- Available in three different wire tensions
- Red for .900 tokens or below
- Black for U.S. quarters and .984 tokens
- White for 1" tokens and above

Part# 891-1116-16 U.S. QTR.

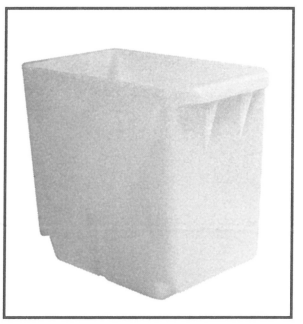

PLASTIC CASHBOX

- Durable plastic material
- Holds 4,000 U.S. quarters

Part Number 820-4177-00

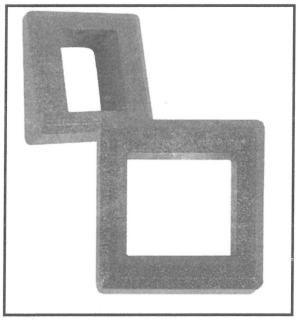

COIN DOOR BEZELS

- Upper bezel and reject bezel made of durable nylon material

Part # 891-1311-16 (upper)
Part # 891-1312-16 (lower)

	Part #	Description
1.	891-1008-041	Lockout Bracket
2.	891-2125-00	Lockout Coil 12 VDC
3.	891-1032-01	Mounting Screw
4.	891-1206-02	Keps Nut #4-40

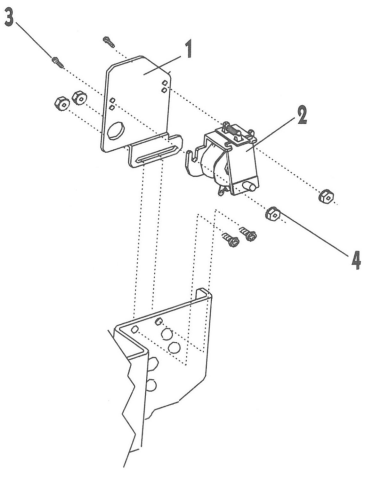

WELLS-GARDNER
ELECTRONICS CORPORATION

BILL ACCEPTORS

BILL ACCEPTORS

ISO 9001 REGISTERED QUALITY
certificate № 0104

WELLS-GARDNER
ELECTRONICS CORPORATION

JCM AMERICAN
BILL ACCEPTORS

DBV-45/145/146 SU
Bill Acceptors

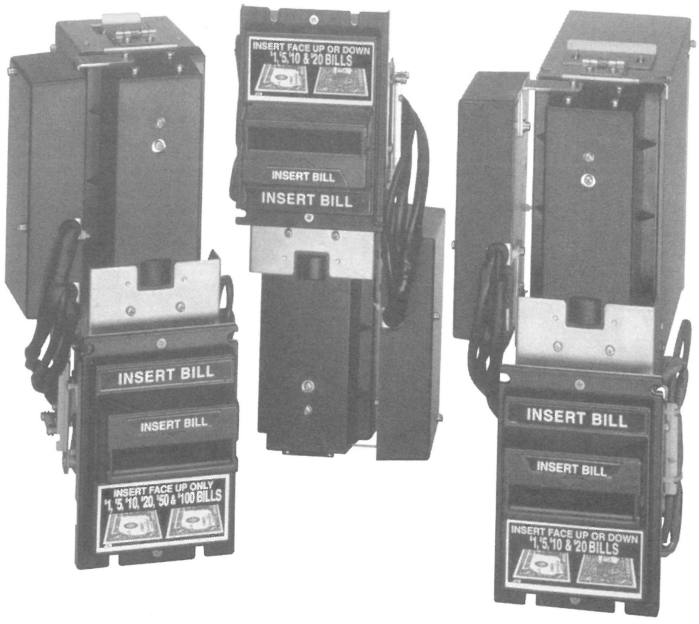

DBV-45 ($1, $5, $10, $20)	WG P/N	025A-1414-001
DBV-145 ($1, $5, $10, $20, $50, $100)	WG P/N	025A-1415-001
DBV-146 ($1, $5, $10, $20, $50, $100) Plus Bar-Coded Coupon Reader	WG P/N	025A-1416-001

- U.S. or Australian Currency
- Universal Stacking Configurations
- Custom Sensor Technology
- Denominations Dip Switch Selectable
- Choice of Interfaces Serial / Pulse or RS/232
- Highest Acceptance of Street Grade Bills
- Choice of Magazine Sizes
- Bar-Coded Coupon Reader (Optional)

JCM AMERICAN CORPORATION

REGISTERED ISO 9001 QUALITY
certificate № 0104

WELLS-GARDNER
ELECTRONICS CORPORATION

DBV-45/145/146 SU
BILL ACCEPTORS

ISO 9001 REGISTERED QUALITY certificate № 0104

DIMENSIONS SHOWN ARE FOR REFERENCE ONLY. FOR SPECIFICS CONTACT W.G.E.C. ENGINEERING.
2701 North Kildare Avenue Chicago, Illinois 60639 Phone (773) 252-8220 Fax (773) 252-8072

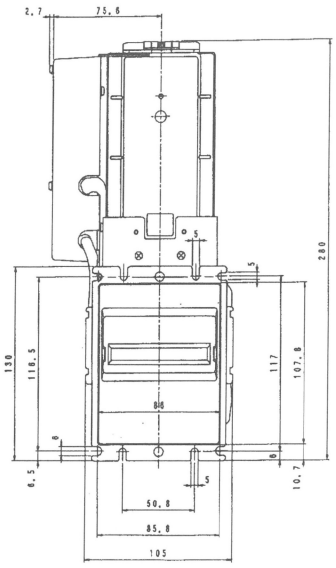

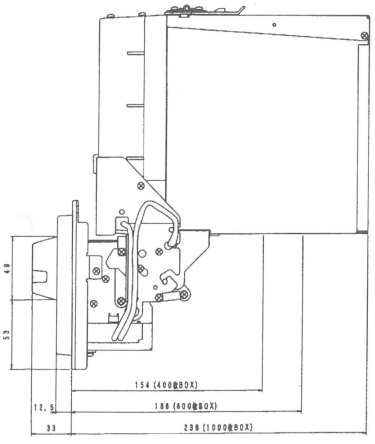

Drawings in Millimeters

ITEM	SPECIFICATIONS
Power Requirements	95 VAC to 135 VAC W/Power Supply (50 to 60 Hertz) or 12V DC (Max 12 VA)Aspect Ratio: 16:9 (width:height)
Magazine Capacity:	400 Notes 600 Notes 1,000 Notes
Shipping Weight:	DBV-45/145/146 SU 400.....5.37lbs. DBV-45/145/146 SU 600.....5.75lbs. DBV-45/145/146 SU 1,000 .....6.23lbs.
Weight:	87 lb./39.9 kg
Accessories:	Pulse Connector (14 Pin).....Pt. No. J91016 AC Power Harness (9 Pin) .....Pt. No. J91010 DC Power Harness (6 Pin) ..... Pt. No. J91017A Serial Harness (14 Pin).....Pt. No. J91015 Power Supply .....Pt. No.039516 Mounting Kit .....Pt. No.J91030 Labels .....Each has its own label
Software:	Software upgrades are released for anti-theft, currency changes and security measures.
Technical Support/ Training Classes:	Available for all JCM products.
ITEM	CONFIGURATION
DBV:	Stack Universal (Up or Down)
45:	Accepts 6 Denominations $1, $5, $10, $20, $50, $100 Plus Bar-Coded Coupon Reader Pt. No. J91046 - label
145:	Accepts 6 Denominations $1, $5, $10, $20, $50, $100 Pt. No. J91047
146:	Accepts 4 Denominations $1, $5, $10, $20 Pt. No. J91047
SU:	U.S. Dollar Bill Validator

UL APPROVED

WELLS-GARDNER
ELECTRONICS CORPORATION

DBV-10/20/30
BILL ACCEPTORS

JCM AMERICAN BILL ACCEPTORS

DBV-10	($1)	WG P/N 025A-1511-001
DBV-20	($1, $2, $5)	WG P/N 025A-1512-001
DBV-30	($1, $2, $5, $10, $20)	WG P/N 025A-1513-001

- U.S. or Australian Currency
- Price Competitive / Cost Efficient
- Anti-Pullback Cheat Device
- LED Indicators
- Simple Design
- Easy to Maintain and Install
- Highest Acceptance of Street Grade Bills

JCM AMERICAN CORPORATION

ISO 9001 REGISTERED QUALITY
certificate № 0104

WELLS-GARDNER
ELECTRONICS CORPORATION

DBV-10/20/30
BILL ACCEPTORS

ISO 9001 REGISTERED QUALITY certificate № 0104

DIMENSIONS SHOWN ARE FOR REFERENCE ONLY. FOR SPECIFICS CONTACT W.G.E.C. ENGINEERING.
2701 North Kildare Avenue Chicago, Illinois 60639 Phone (773) 252-8220 Fax (773) 252-8072

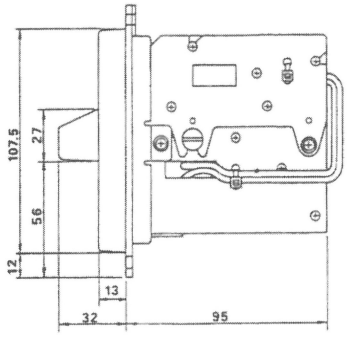

ITEM	SPECIFICATIONS
Power Requirements	95 VAC to 135 VAC W/Power Supply (50 to 60 Hertz) or 12V DC (Max 12 VA)
Shipping Weight:	DBV-10/20 .....2.08lbs. DBV-30 .....6.23lbs.
Accessories:	AC Power Harness (9 Pin) .....Pt. No. J91010 DC Power Harness (6 Pin) ..... Pt. No. J91017A Power Supply .....Pt. No.039516 Mounting Kit .....Pt. No.J91030 Labels .....Each has its own label
Software:	Software upgrades are released for anti-theft, currency changes .. and security measures.
Technical Support/ Training Classes:	Available for all JCM products.

ITEM	CONFIGURATION
DBV:	U.S Dollar Bill Acceptor
10:	Accepts 1 Denomination $1 Pt. No. J91048 - label
20:	Accepts 3 Denominations $1,$2,$5 Pt. No. J91048 - label
30:	Accepts 5 Denominations $1,$2,$5,$10,$20 Pt. No. J91046 - label

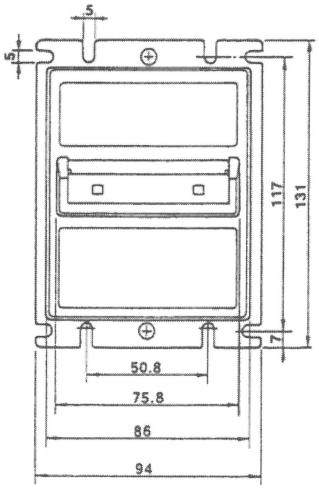

UL APPROVED

Drawings in Millimeters

WELLS-GARDNER
ELECTRONICS CORPORATION

MARS BILL ACCEPTORS

BILL ACCEPTOR SERIES 2000
AE 2400

MARS®
Bill Acceptor Series 2000

USER FRIENDLY

It's the device your customers can trust to perform reliably — time and time again. The low jam rate and high acceptance rate mean more transactions, less customer frustration and greater profits.

SECURITY

Multiple wavelength optical sensing and sophisticated data processing combine for exceptional security and value. Fully-encased optical sensors ensure consistent, high quality recognition.

While no system can claim complete security, Series 2000 sensors greatly reduce vulnerability to various forms of fraud.

HIGH ACCEPTANCE RATE

More convenience means higher customer satisfaction. Series 2000 satisfies customers by accepting torn, wrinkled, faded, damp, dirty, limp, folded, spindled or mutilated bills. Little or no bill preparation is required. For tentative or impatient customers, bills can be fed in any direction, face up or down.

Other user-friendly features include increased bill capacity that ensures ongoing service at high-volume sites.

EASY, TIME-SAVING SETUP

The Series 2000's new design ensures convenient access to all switches. Easy-to-read labels explain switch settings. With the AE 2400, options can be easily customized on-location via a simple-to-use configuration coupon.

LOW MAINTENANCE

With the streamlined recognition system, sensors are embedded under the smooth plastic bill path and the magnetic pinch roller has been eliminated, dramatically reducing debris buildup and the need for cleaning.

FUTURE FLEXIBILITY

The AE 2400 accepts $1, $2 and $5 bills. It can be easily configured to address changing needs and updated to handle potential new currency designs.

ISO 9001 REGISTERED QUALITY
certificate № 0104

WELLS-GARDNER
ELECTRONICS CORPORATION

BILL ACCEPTOR SERIES 2000 AE 2400

ISO 9001 REGISTERED QUALITY certificate № 0104

DIMENSIONS SHOWN ARE FOR REFERENCE ONLY. FOR SPECIFICS CONTACT W.G.E.C. ENGINEERING.
2701 North Kildare Avenue Chicago, Illinois 60639 Phone (773) 252-8220 Fax (773) 252-8072

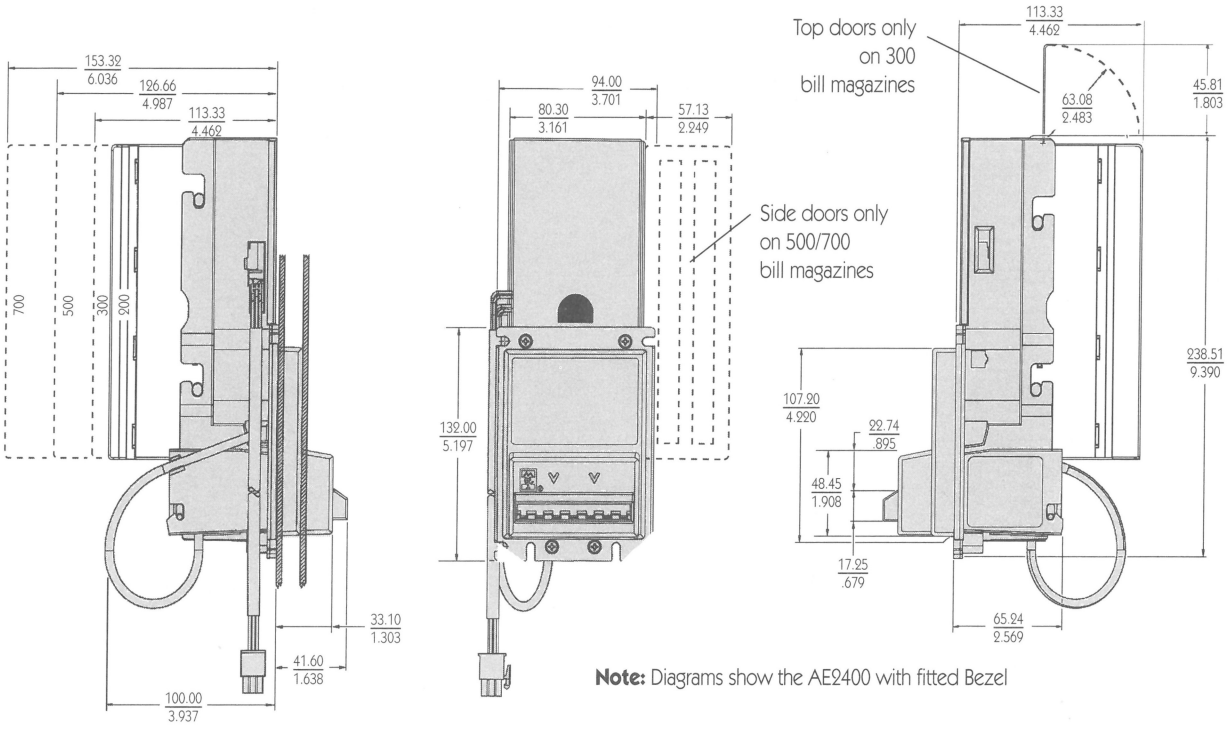

Note: Diagrams show the AE2400 with fitted Bezel

WG P/N	Mars Model Number	Description
025A1505-001	AE2451-U3E	110 volt bill validator with 300 bill capacity
025A1506-001	AE2451-U5E	110 volt bill validator with 500 bill capacity
025A1507-001	AE2451-U7E	110 volt bill validator with 700 bill capacity

WELLS-GARDNER
ELECTRONICS CORPORATION

COLOR LCD DISPLAYS

LCD FLAT PANEL DISPLAY

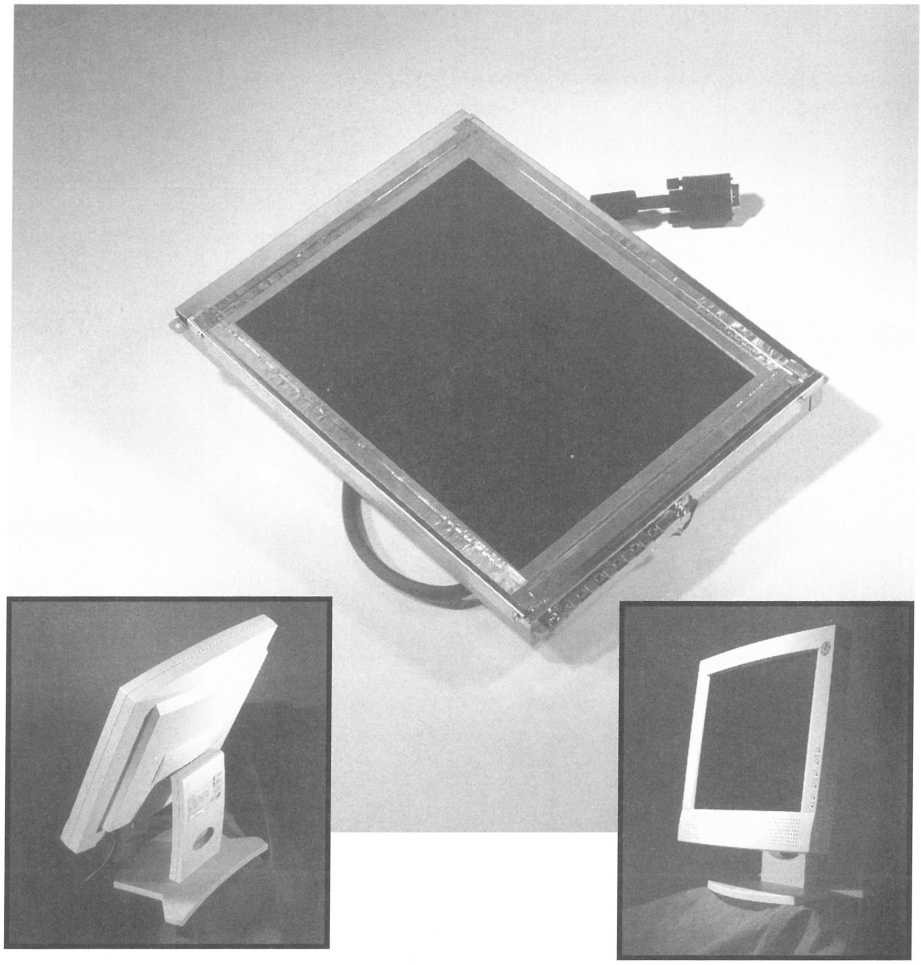

PART #	WGF1210-M1LS43J	WGF1410-M1LS44J	WGF1510-M1LS45J
LCD SIZE (IN/CM)	12.1".31CM	14.1"/36cm	15/1"/38cm
Contrast Ratio	120:1	200:1	300:1
Brightness (cd/m²)	120	200	250
Viewing Angle	H:100°/V:60°	H:140°/V:140°	H:110°/V:95°
Color	262K	262K/16M	262K/16M
Scanning Frequency	24-55kHz 59-90 Hz	24-61kHz 59-90 Hz	24-61kHz 59-90 Hz
Dimensions	320 x 323 x 146	388 x 381 x 175	408 x 388 x 175
Power Supply	Universal input AC adapter (external)		
Regulation	FCC/B, VCCI, CE, UL, CSA, TUV-ERGO		
Options	Wall mount device, Touch Screen, USB (for new ID only)		

ISO 9001 REGISTERED QUALITY
certificate № 0104

WELLS-GARDNER
ELECTRONICS CORPORATION

LCD FLAT PANEL DISPLAYS

ISO 9001 REGISTERED QUALITY certificate № 0104

12.1"—LCD FLAT PANEL DISPLAY

PANEL SPECIFICATION

• Display Type	Active matrix color TFT LCD
• Display Pixels	800 x (RGB) x 600
• Display Area	246 mm (W) x 184.5 mm (H) (12.1" diagonal)
• Pixel Pitch	0.1025 mm x RGB (W) x 0.3075 mm (H)
• Contrast Ratio	120 min.
• Response (Rise/Fall) Time	50/50 ms (max.)
• Brightness	120 cd/m² typ.
• Viewing Angle(CR≥10)	Vertical up/down, 10°/30° Horizontal left/right, 45°/45°

INTERFACE FREQUENCY RANGES

• Horizontal Frequency	24 kHz—54 kHz
• Vertical Frequency	50 Hz—90 Hz

CONTROLLABLE FUNCTIONS

• Contrast	Contrast adjustment, ranging from 0 to 155
• Brightness	Brightness adjustment, ranging from 0 to 253
• V-Position	Vertical position adjustment
• H-Position	Horizontal position adjustment
• Clock	Sampling frequency adjustment
• 800x600 85 Hz	Display resolution and frame frequency
• Phase	Phase adjustment
• Text/Graphic	640 x 400 or 720 x 400 mode selection
• Expansion	Display expansion ON/OFF select (exclude 800 x 600 mode)
• Color Temp.	Color temperature for standard 9300, 6500, or user defined
• User Color	User defined color adjustment, when selected, go to next page

POWER CONSUMPTION

22 w max.

14.1" AND 15.1"—LCD FLAT PANEL SPECIFICATION

PANEL SPECIFICATION

• Display Type	Active matrix color TFT LCD
• Display Pixels	1024 x (RGB) x 768
• Display Area	294.9 mm (W) x 221.2 mm (H) (14.5" diagonal)
• Pixel Pitch	0.096 mm x RGB (W) x 0.288 mm (H)
• Contrast Ratio	100 typ.
• Response (Rise/Fall) Time	28/28 ms (typ.)
• Brightness	200 cd/m² typ.
• Viewing Angle(CR≥5)	Vertical up/down, 20°/60° Horizontal left/right, 50°/50°

INTERFACE FREQUENCY RANGES

• Horizontal Frequency	24 kHz—61 kHz
• Vertical Frequency	50 Hz—90 Hz

CONTROLLABLE FUNCTIONS

• Contrast	Contrast adjustment, ranging from 0 to 155
• Brightness	Brightness adjustment, ranging from 0 to 253
• Auto Setting	Auto Adjust timing parameters in OSD Menu
• V-Position	Vertical position adjustment
• H-Position	Horizontal position adjustment
• Clock	Sampling frequency adjustment
• 1024x768 70 Hz	Display resolution and frame frequency
• Phase	Phase adjustment
• Text/Graphic	640 x 400 or 720 x 400 mode selection
• Expansion	Display expansion ON/OFF select (exclude 1024 x 768 mode)
• Color Temp.	Color temperature for standard 9300, 6500, or user defined
• User Color	User defined color adjustment, when selected, go to next page

POWER CONSUMPTION

40 w max.

GENERAL

VIDEO INPUTS

• Type	Analog R, G, B
• Input Impedance	75 ohm ± 2%
• Amplitude	0 – 0.7 ± 0.05 V peak
• Polarity	Positive
• Display Color	262144 colors

SIGNAL CONNECTOR

15 pin D-sub connector PC compatible

SYNCHRONIZATION INPUTS

• Signals	Separate horizontal and vertical sync which are TTL compatible.
• Polarity	Positive and negative.

CONTROL PANEL

1. Function select up.
2. Function select down.
3. Adjust increase.
4. Adjust decrease.
5. Power ON/OFF switch, push to ON and push to OFF. (toggle switch)
6. Power LED, will be lit when monitor is on; be blinking when in power saving mode.

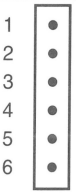

WELLS-GARDNER
ELECTRONICS CORPORATION

PLASMAVISION 42

WORLD'S FIRST BIG SCREEN, FLAT PANEL DISPLAY

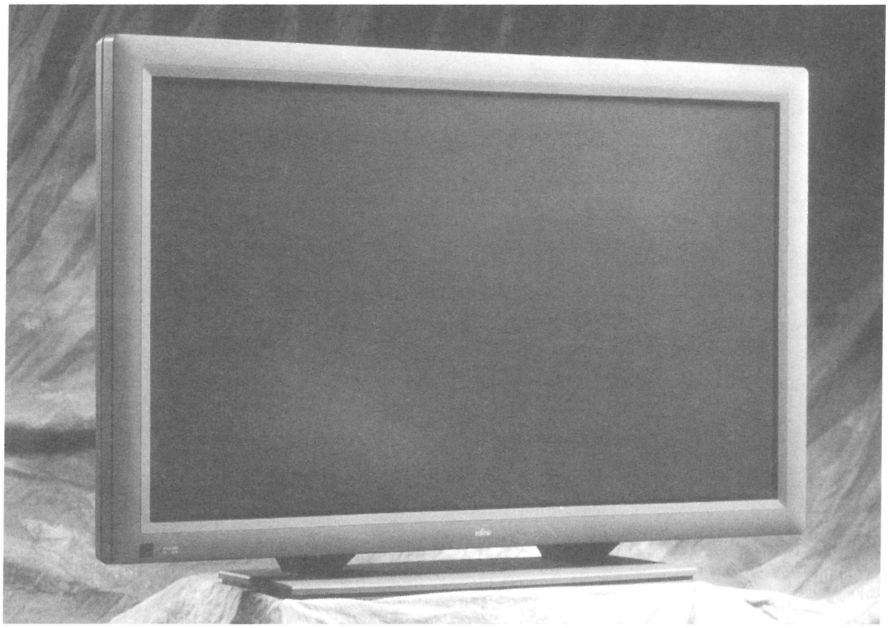

The display of the future is here - the Plasmavision 42 from Fujitsu General.

Yesterday it was a dream, today it's reality. Now, stunning video and computer graphics on a 42" diagonal screen that is less than 6 inches thick. This innovative display is the latest in digital display technology and makes an impressive statement in any environment.

FUJITSU

REGISTERED ISO 9001 QUALITY
certificate № 0104

WELLS-GARDNER
ELECTRONICS CORPORATION

PLASMAVISION

ISO 9001 REGISTERED QUALITY
certificate № 0104

Plasmavision™

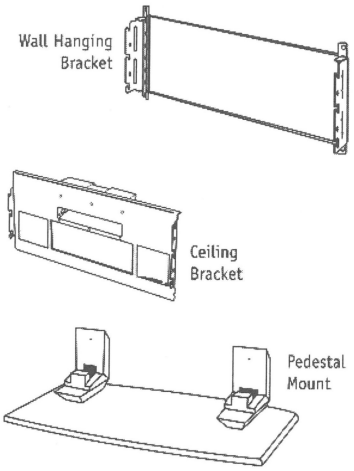

ITEM	SPECIFICATIONS
Screen Size:	42in/105.6cm diagonal, 36.2in/92cm wide, 20.4in/518cm high
Aspect Ratio:	16:9 (width:height)
Resolution:	852 x 480 pixels
Brightness:	120 cd/m^2 (at 15% APL)
Viewing Angle:	160° horizontally and vertically
Displayable Colors:	16.7 million
Audio Input:	L & R RCA type connectors for built-in stereo speakers, 2W each
Weight:	87 lb./39.9 kg
Life:	30,000 hours (elapsed time to 50% of initial brightness)
Dimensions:	40.9 in/104.0cm wide, 25.2in/64.0cm high, 5.9in/15.0cm deep
TV Input:	Composite BNC connector or S-video; compatible with NTSC, PAL, and SECAM standards
Computer Input:	VGA connector; compatible with VGA (640 x 480), SVGA (800 x 600), and MAC PC's
Display Frequency:	15.73kHz to 37.90 kHz horizontally, 50 Hz to 75 Hz vertically
Image Scaling:	Intelligent re-sizing of TV and computer images to 16:9 aspect ratio.
Control Panel:	On-board control panel.
Remote Control:	Included
External Control:	RS-232C D-sub 9-pin connector
Power Source:	100-240V Universal Supply at 50 Hz - 60 Hz Operation
Power Consumption:	350 watts
Warranty:	One year parts and labor

ITEM	OPTIONAL ACCESSORIES
Graphics Card:	PCI card and software produces 852 x 480 resolution from desktop computers, tower computers, and notebook docking stations.
Pedestal Mount:	Supports Plasmavision 42 on horizontal surface.
Horizontal Wall Mounting Brackets:	Hardware for mounting Plasmavision 42 to wall. Choose brackets for 0, 5, 10 or 15 degrees
Vertical Wall Mounting Bracket:	Hardware for mounting Plasmavision 42 to wall in vertical orientation.
Ceiling Mount:	Mounts Plasmavision 42 to ceiling. Adjusts for 0 thru 15° of tilt.

ACCESSORY HIGHLIGHTS

Make the most of this exciting new display with a range of custom accessories. A variety of mounting hardware is available to support a wide range of applications. A special graphics card is available which allows you to take full advantage of the high resolution graphics display capabilities of this product.

SIMPLE SET-UP

Horizontal, vertical and ceiling mount bracket systems offer convenient solutions for optimal viewing. Choose from 0, 5, 10 or 15 degrees of tilt for perfect images. Or, select the pedestal mount designed for the desktop and easy portability.

WELLS-GARDNER
ELECTRONICS CORPORATION

PLAYMASTER EXTREME

PLAYMASTER EXTREME

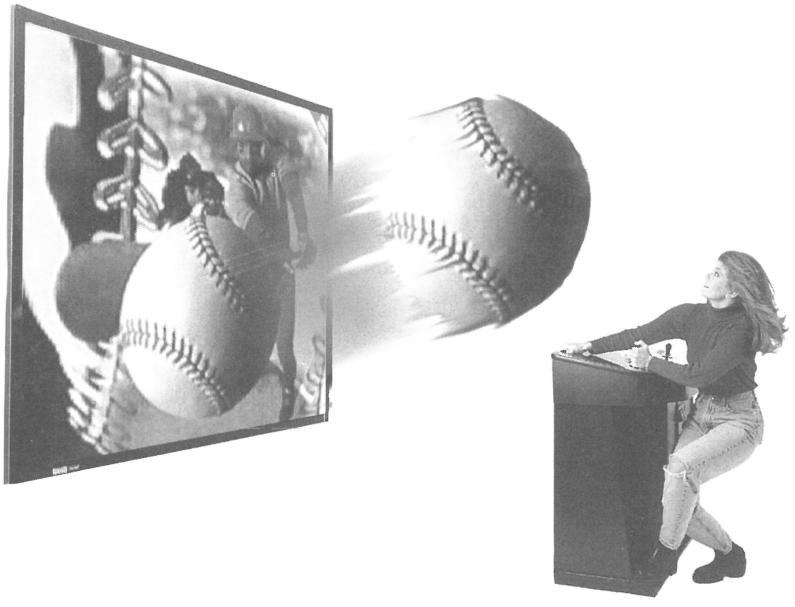

WELLS-GARDNER takes game play to the Extreme!

INTRODUCING PLAY MASTER EXTREME,
THE NEXT EXPERIENCE IN GAME PLAY.

PLAY MASTER EXTREME takes the arcade experience to the big screen.
PLAY MASTER EXTREME is a game system cabinet which will showcase the hottest games.

FEATURES:

- LCD
- CRT based projection
- MULTI-SCAN VIDEO SYSTEM which handles CGA, EGA, and VGA.
- Accepts multiple video sources
- Includes REMOTE CONTROL for video adjustments
- Includes 100" PROJECTION SCREEN
- COIN CONTROL COIN DOOR and MECH.
- Available in sit down and pedestal versions
- JAMMA compatible wiring
- Adjustable picture size 60" to 240"
- 1 to 4 player system
- Mono or stereo based on the game
- Easy installation
- Includes EXTRA control panel for next conversion

ISO 9001 REGISTERED QUALITY
certificate № 0104

WELLS-GARDNER
ELECTRONICS CORPORATION

PLAYMASTER EXTREME II CRT PROJECTOR

ISO 9001 REGISTERED QUALITY certificate № 0104

DIMENSIONS SHOWN ARE FOR REFERENCE ONLY. FOR SPECIFICS CONTACT W.G.E.C. ENGINEERING.
2701 North Kildare Avenue Chicago, Illinois 60639 Phone (773) 252-8220 Fax (773) 252-8072

PLAY MASTER II Extreme

WG P/N: WGP1000-K00S20H

WG P/N: WGP1000-K00S32H
(with Sit down pedestal)

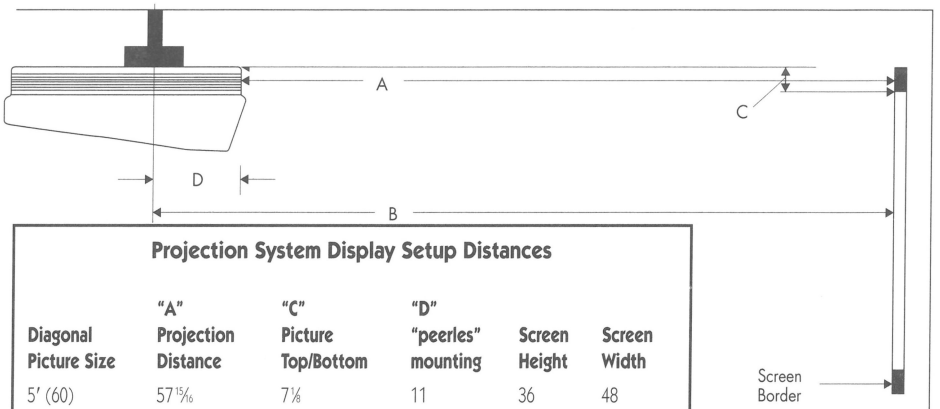

Projection System Display Setup Distances

Diagonal Picture Size	"A" Projection Distance	"C" Picture Top/Bottom	"D" "peerles" mounting	Screen Height	Screen Width
5' (60)	57 15/16	7 1/8	11	36	48
8' (100)	95 7/16	6 5/8	11	60	80
16' (192)	182 9/16	5 7/8	11	129 3/8	163 3/16

SPECIFICATIONS

CRT PROJECTOR

Color System	5 System (PAL/SECAM/NTSC/NTSC 4.3/SVGA)
CRT Projection System	7 inch High Performance Liquid Cooled Tubes, 5 inch active phosphor area, 90 degree deflection angle, Super Oxide Cathodes
RGB Resolution	1920 X 1080 lines (interlace)
Brightness	800 lumens peak light output
Projection Image Size Diagonal	60 to 240 Adjustable
Throw Distance	5' to 20'
Voltage	90-137 VAC, 180-264 VAC, 47-63Hz
Remote Control Battery	Three "AA" (included)
Scanning Frequency	Automatic Frequency Control H. Sync. 15 kHz - 50.0 kHz V. Sync. 40 Hz - 100 Hz
Dimensions	12.9" X 25.75" X 33.28"
Net Weight	95 lbs.
AV Input Jacks	5-BNC Analog (RGB/HV) with full VGA and VESA Super VGA tracking compatibility, BNC Type X 1: Din 4 Pin (S-Video) X 1
Computer Input/Output Jacks	RS232 serial port

PEDESTAL

Dimensions	39" X 21" X 43"
Weight	50 lbs.
Color	Black
Includes	Jamma Wiring, Competition Joysticks (2), Coin Door and Mechs, power supply, buttons

SCREEN

Dimensions	84" X 63"
Weight	18 lbs.
Frame	Aluminum
Picture Size	100" Diagonal

OPTIONS Sit Down Pedestal, Screens, Bill Validator, 1 to 4 Player Wiring

WELLS-GARDNER
ELECTRONICS CORPORATION

PLAYMASTER EXTREME I
LCD PROJECTOR

ISO 9001 REGISTERED QUALITY
certificate № 0104

DIMENSIONS SHOWN ARE FOR REFERENCE ONLY. FOR SPECIFICS CONTACT W.G.E.C. ENGINEERING.
2701 North Kildare Avenue Chicago, Illinois 60639 Phone (773) 252-8220 Fax (773) 252-8072

PLAY MASTER I *Extreme*

WG P/N: WGP1000-K00S19H

WG P/N: WGP1000-K00S31H
(with Sit down pedestal)

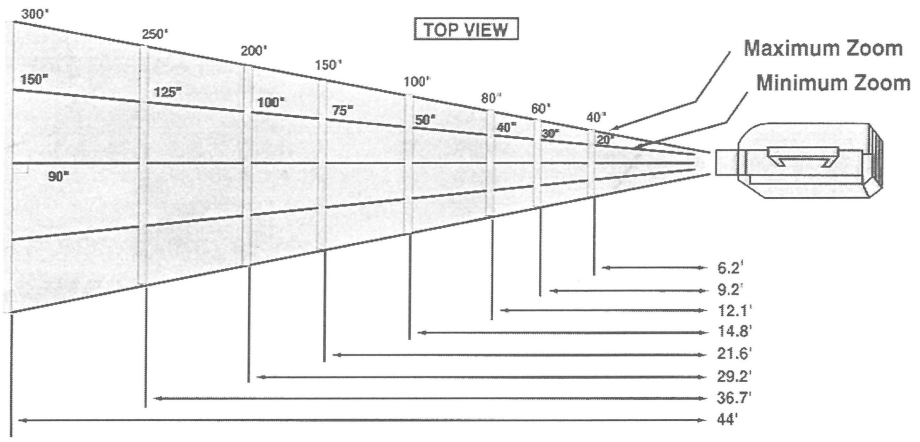

SPECIFICATIONS

LCD PROJECTOR

Color System	4 System (PAL/SECAM/NTSC/NTSC 4.3)
LCD Panel System	1.3" Polysilicon TFT (Thin Film Transistor) Active Matrix Type X 3
Panel Resolution	640 X 480 lines
Brightness	475 ANSI Lumens
Projection Image Size Diagonal	30" to 300" Adjustable
Throw Distance	5' to 20'
Voltage	120V AC, 50-60 Hz
Remote Control Battery	Three "AA" (included)
Scanning Frequency	Automatic Frequency Control H. Sync. 15 kHz - 37.9 kHz V. Sync. 50 Hz - 70 Hz
Dimensions	6.2" X 16.9" X 15.2"
Net Weight	21.8 lbs.
AV Input Jacks	RCA Type X 2 (Stereo Audio L/R, Stereo AV. V, L/R): BNC Type X 1: Din 4 Pin (Serial Port) X 1
Computer Input/Output Jacks	HD-DB15 Terminal X 1: Din 8 Pin (Serial Port) X 1 BNC Type (Red, Green, Blue, Horiz. Sync., and Vert. Sync.)

PEDESTAL

Dimensions	39" X 21" X 43"
Weight	50 lbs.
Color	Black
Includes	Jamma Wiring, Competition Joysticks (2), Coin Door and Mechs, power supply, buttons

SCREEN

Dimensions	84" X 63"
Weight	18 lbs.
Frame	Aluminum
Picture Size	100" Diagonal

OPTIONS Sit Down Pedestal, Screens, Bill Validator, 1 to 4 Player Wiring

WELLS-GARDNER
ELECTRONICS CORPORATION

PROJECTORS

PROJECTORS

ISO 9001
REGISTERED
QUALITY
certificate № 0104

WELLS-GARDNER
ELECTRONICS CORPORATION

PLV-20N

Portable LCD Color Video Projector

ISO 9001 REGISTERED QUALITY
certificate № 0104

P L V - 2 0 N
PRODUCT SPECIFICATIONS

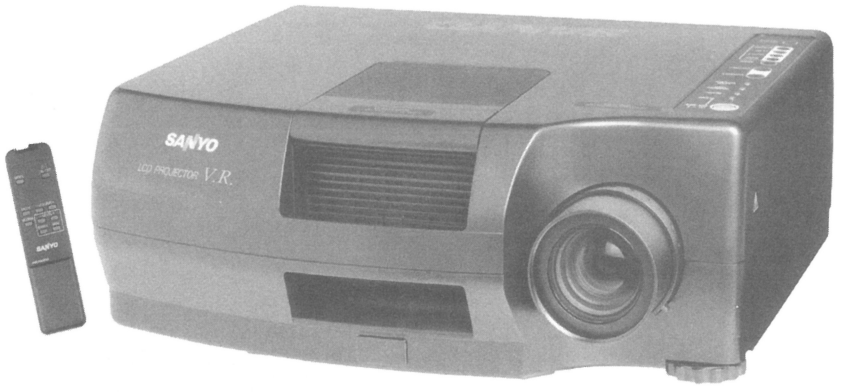

MAIN FEATURES

- **Bright 500 ANSI Lumens** helps assure rich and fully detailed images, regardless of video source.
- **90% Ultrahigh Uniformity Rate** assures the same light intensity at the outer reaches of the projected image as in the center of it.
- **Reverse Scan** modes of left/right and top/bottom offer user the options of rear screen projection and ceiling mounting.
- **Adjustable Image Size** allows picture to be adjusted to any dimension from 30" to 300" diagonal. It has a throw distance of 4.9' to a maximum projection distance of 39.4'.
- **Crisp Accurate Color Reproduction** is assured by the 921,600 total pixels provided by the three 1.3" Thin Film Transistor (TFT) polysilicon LED panels.
- **High-Quality Picture** is provided by 5so Tv lines of horizontal resolution, which also ensures ultraclear large-screen images.
- **Assorted A/V Input and Output Terminals** let user incorporate a variety of A/V equipment into the presentation. Input jacks include: two sets RCA L/R, two RCA video in, plus BNC and S-video
- **Infrared/Wired Remote Control** offers extra convenience and mobility, as user can move away from the projector with the infrared remote, or still enjoy easy remote operation while at the unit.
- **Lamp Replacement Indicator** lights orange when the projection lamp assembly reaches half-life (1000 hours). The assembly has been designed to be user-friendly replaceable. See your dealer for replacement
- **Warranty Protection** of one year on parts and labor and 90 days on the lamp assembly protects purchasers from defects in materials and workmanship.

WELLS-GARDNER
ELECTRONICS CORPORATION

PLV-20N
MECHANICAL SPECIFICATIONS

ISO 9001
certificate № 0104

SANYO

SPECIFICATIONS

Brightness	500 AN51 Lumens, Typical
Uniformity	90%
Color System	NTSC
LCD Panel System	1.3" TFT (Thin Film Transistor) Polysilicon Active Matrix Type x 3
Number of Pixels	921,600 (307,200 x 3) 640 x 480 dots
Optical Resolution	Dichroic Mirror with Integrator Lens
Projection Image Size	Adjustable from 30" to 300" Diagonal
Contrast Ratio	100:1
Zoom/Focus	1:1.3, Manual Zoom
Projection Lens	F2.8 to 3.2, f2.1 to 2.7
Lens Aperture	2.04"
Up/Down Ratio	3:1
Horizontal Resolution	550 TV Lines
Throw Distance	4.9' to 39.4'
Reversible Projection	Right/Left, Top/Bottom
Image Elevation Adjustment	Up 6'
Projection Lamp	200 Watt, Metal Halide
Built-In Speaker	One-Piece, 3-Watt RMS, Monaural
Voltage	1 20V AC 50/60Hz
Power Consumption	285 Watts/4.6A (Max. Ampere)
Remote Control Battery	AA Type (2)
Dimensions (HxWxD)	6.2" x 16.9" x 15.2"
Net Weight	22 lbs.
Accessories	AC Power Supply Cord, Remote Control Unit, 5' Remote Control Cable, Owner's Manual, Lens Cover, Dust Cover and Warranty

TERMINALS

S-Video Input	DIN4 (1)
BNC Video Input	(1)
AV Input	RCA (2) V, L/R
AV Monitor Output	RCA (I) V, L/R
External Speaker	Monaural Minijack (1)
DC-V Output	12V, 120mA (I)
Wired Remote Jack	Minijack (1)

Because its products are subject to continuous improvements, Sanyo reserves the right to modify product design and specifications without notice and without incurring any obligations. © Copyright 1997, Sanyo Presentation Technologies

WELLS-GARDNER
ELECTRONICS CORPORATION

PLC-550M

Portable High-Definition LCD Color Multimedia Projector

ISO 9001
REGISTERED QUALITY
certificate № 0104

P L C - 5 5 0 M
PRODUCT SPECIFICATIONS

MAIN FEATURES

- Versatile Multimedia Projector That Generates Crisp, Powerful Images as Large as 300" (Diagonal)
- Compact Lightweight-Less Than 22 Lbs. Net Weight
- 921,600 Pixels, 3 High-Grade TFT Active Matrix LED Panels
- 500 ANSI Lumens
- Easily Connects to VGA and Macintosh Mac II Systems
- **AUDIO CLARITY AND STEREO ADAPTABILITY** If sound is a key element of a presentation, the built-in 3-watt monaural audio amplifier delivers the message loud and clear. If the presentation is in stereo, the PLC-550M includes a stereo audio-output jack for connecting an external speaker system.
- **30 SECONDS AND COUNTING** False starts are not only embarrassing to a presenter, but, if not caught, also can throw off the timing of any comments the presenter wishes to make. After initially being turned on, the PLC550M has a 30-second countdown feature that eliminates false starts by displaying a clock that counts down from 30 to 0 and the words "A Moment". After reaching zero, when the projector is ready for use, the word "standby" appears on the screen and a green light is brightly illuminated on the control panel.
- **LIGHTED CONTROL PANEL** Nothing can stop a presentation cold like having to stop and turn up the lights to make an adjustment of some sort. The PLC-550M features a lighted control panel that never leaves the presenter in the dark if an audio or video adjustment is needed.
- **REMOTE CONTROL EASE** Whether the presenter is one who likes to roam the room or prefers to stay close to home, the Sanyo PLC-550M wireless remote control can accommodate either style. Remote-controlled functions include adjusting the volume, muting the sound, making picture adjustments, or back lighting all the function buttons for five seconds.
- **FOR CRISP, CLEAN IMAGES AND SOUND FROM A PORTABLE MULTIMEDIA PROJECTOR, CHOOSE THE VERSATILE SANYO PLC-550M HIGH-DEFINITION LCD COLOR PROJECTOR.**

WELLS-GARDNER
ELECTRONICS CORPORATION

PLC-550M
MECHANICAL SPECIFICATIONS

ISO 9001 REGISTERED QUALITY certificate № 0104

SANYO

SPECIFICATIONS

Color System	4 System (PAL/SECAM/NTSC/NTSC 4.3)
LCD Panel System	1.3" Polysilicon TFT (Thin Film Transistor) Active Matrix Type x 3
Panel Resolution	640 x 480 Lines
Number of Pixels	921,600 (307,200 x 3)
Brightness	500 ANSI Lumens
Uniformity	70%
Projection Image Size (Diagonal)	30" to 300" (Adjustable)
Horizontal Resolution	550 TV Lines (S-Video Input)
Throw Distance	6.2' to 44'
Up/Down Ratio	1:9
Projection Lens	f2.8 to 3.2 Lens with Manual Zoom Focus
Lens Aperture	2.04"
Projection Lamp	200 Watt (Short Arc Type), Metal Halide
Projection Mirror	Dichroic Mirror System with Integrator Lens
Amplifier/Speaker	Internal Monaural Speaker; 3 Watts RMS (THD: i0%); 2" x 3 1/2"
Image Elevation Adj.	Up 6°
Voltage	120V AC, 50/60Hz
Power Consumption	270 Watts
AC Power Cord	Minimum 10' (SJT 3P Grounding-Type, Detachable Plug)
Remote Control Battery	Three "AA" (Not Included)
Scanning Frequency	Automatic Frequency Control H Sync. 15 kHz - 37.9kHz V Sync. 50Hz - 70Hz
Over Scan	Horizontal 7%, Vertical 4%
Operating Voltage	120V Plus/Minus 10%
Dimensions (HxWxD)	6.2" x 16.9" x 15.2"
Net Weight	21.8 lbs.
Accessories	Remote Control Unit, Cable, AC Power Supply Cord, VGA Y Cable, MAC II Y Cable, Lens Cover, VGA Video Terminator, Macintosh Video Terminator, Instruction Manual and Dust Cover

TECHNICAL SPECIFICATIONS

AV Input Jacks	RCA Type x 2 (Stereo Audio L/R, Stereo AV V, L/R); BNC Type x 1; DIN 4 Pin (S-Video) x 1
Computer Input/Output Jacks Type	HD-DB15 Terminal x 1, DIN 8 PIN (Serial Port) x 1; BNC x 5 (Red, Green, Blue, Horiz. Sync., and Vert. Sync.)
Computer Audio Input Jack	RCA Type (L/R) x 2
Serial Port	RS-232
Video Monitor Output Jack	RCA Type x 1
Audio Monitor Output Jacks	RCA Type (L/R) x 2

Because its products are subject to continuous improvements, Sanyo reserves the right to modify product design and specifications without notice and without incurring any obligations. © Copyright 1997, Sanyo Presentation Technologies

WELLS-GARDNER
ELECTRONICS CORPORATION

PLC-5600N

Multi Media ProX-II

PLC-5600N
PRODUCT SPECIFICATIONS

MAIN FEATURES

- True SVGA Resolution (800 X 600)
- Proprietary Digital Realized Interpolation Technology (DRIT) mathematically and digitally interpolates an image, creating an elegant compression that is virtually true and natural
- DRIT also performs digital expansion,allowing a VGA signal to expand into a virtually natural image
- SUPER BRIGHT—over 700 ANSI Lumens with greater than 85% uniformity
- REVOLUTIONARY POLARIZED BEAM SPLITTER (PBS) Optical System
- 120W UHP (ULTRA HIGH POWER) Projection Lamp
- Power Focus and Power Zoom with a 1:1.6; zoom ratio that can adjust image size from 20" to 400" diagonal
- ULTRA COMPACT SIZE— footprint is slightly larger than a laptop computer and weighs only 13 LBS.
- PLUG-AND-PLAY convenience with auto-set control of fine sync, total DOT adjustment and positioning
- MULTIVOLTAGE, MULTISYSTEM, MULTILANGUAGE for the international traveler
- 250:1 CONTRAST RATIO, one of the best in the industry
- Dual computer inputs and mouse control, S-VHS, and more for extended versatility
- Rear-Screen and ceiling-mountable capabilities
- Powerpad remote control with with easy to use graphic interface (GU1) on-screen menus
- Built-In Dynamic Stereo System

REGISTERED ISO 9001 QUALITY
certificate № 0104

WELLS-GARDNER
ELECTRONICS CORPORATION

PLC-5600N
MECHANICAL SPECIFICATIONS

ISO 9001 REGISTERED QUALITY certificate № 0104

SANYO

The PLC-5600N has a footprint of just over one-square foot and weighs only 13 pounds, making it one of the smallest, lightest models in its class.

The PLC-5600N Multimedia ProX-II is just part of SANYO's full line of LCD projectors. To make any presentation more presentable, trust SANYO, the leader in presentation technologies.

SPECIFICATIONS

Brightness	700 ANSI Lumens
Uniformity	Better than 85%
LCD Panel System	1.3" TFT (Thin Film Transistor) Polysilicon Type x 3
Projection System	Polarized Beam Splitter (PBS) Optical System
Panel Resolution	832 x 624
Number of Pixels	1,557,504 (519,168 x 3)
Compression Method	Elegant Compression (Digital Realized Interpolation Technology DRIT)
Projection Lens	F/2.5-3.2, f=1.85" to 2.95"
Projection Image Size (Diagonal)	Adjustable from 20" to 400"
Throw Distance	3-1/2' to 47'
Contrast Ratio	250:1 (ANSI 1001)
Horizontal Resolution	750 TV Lines
Lens	Powered Zoom and Focus
Zoom Ratio	1:1.6 (With Maximum Zoom of 400" Diagonal)
Over Scan	3% (H), 3% (V)
Projection Lamp	120W UHP(Ultra-High Power) Projection Lamp
Keystone	8:1
Amplifier	Two-Watt/Channel Stereo Sound System
Speakers	1.5" x 2.8"
Voltage	100-120V AC, 200-240V AC, 50/60Hz
Operating Temperature	41°F to 95°F
Storage Temperature	14°F to 140°F
Remote Control Battery	"AA" x 2
Accessories	PowerPad Remote, AC Power Supply Cord, Computer Cable (VGA), MAC Adaptor, PC Control Cable (Multipole PS2/MAC/ Serial), RS-232C Cable, Dust Cover, Owner's Manual
Optional Accessories	1) Soft Carrying Case (Has Area for Laptop and Cables); 2) Hard Carrying Case (Has wheels and Retractable Handle); 3) Shipping Case (ATA) All Cases Meet Airline Carry-on Dimensions

INPUT/OUTPUT	JACKS	SIGNAL LEVELS
Computer Input	HDB15 Terminal (2)	RGB—0.7 Vp-p,75 Ohm, Positive
		HV—TTL Negative or Positive
Computer Out	HDB15 (1)	RGB—0.7 Vp-p, 75 Ohm, Positive
		HV—TTL, Negative or Positive
Computer Audio In	Mini Stereo (2)	
Computer Control Port	Multipole 12 Pin (2)	
AV Input	RCA (1)	Composite Video—1.0 Vp-p 75 Ohm
	S-Video (1)	"Y" Signal—1.0 Vp-p, 75 Ohm
		"C" Signal—0.28 Vp-p, 75 Ohm
	RCA L/R (2)	400mVrms, Min. 1k Ohm
AV Output	RCA (1)	Composite Video—1.0 Vp-p 75 Ohm
	RCA L/R (2)	400mVmrms, Max, 1h Ohm
Ext. Speaker Out	Minipin Jack Stereo (1)	

COMPATIBILITY CHART

SVGA	800 x 600
VGA	640 x 480, 720 x 400, x 640 x 400
MAC 12"	512 x 384
MAC 13"	640 x 480
MAC 16"	832 x 624
PC98	800 x 600, 640 x 480, 640 x 400
RGB Interlaced	NTSC/PAL

COMPRESSED MODE

XGA	1024 x 768
MAC 19"	1024 x 768
PC98	1024 x 768

Because its products are subject to continuous improvements, Sanyo reserves the right to modify product design and specifications without notice and without incurring any obligations . © Copyright 1997, Sanyo Presentation Technologies

WELLS-GARDNER
ELECTRONICS CORPORATION

PLC-9000N

Versatile, Easy Interface

ISO 9001
certificate № 0104

PLC-9000N
PRODUCT SPECIFICATIONS

MAIN FEATURES

- 1500 ANSI Lumens—the Brightest LCD Projector in its class
- Twin-Stacking provides combined total of 3000 ANSI Lumens
- Greater than 85% uniformity with a contrast Ratio Greater than 300:1 — Both are among the Best in the Industry
- Plug-and-Play Convenience for easy operation
- Revolutionary Digital Realized Interpolation Technology (DRIT) provides elegant compression and digital expansion
- Most versatile and easiest interfacing of any LCD projector
- First Detachable Cartridge-Type Adapter for various EWS Connections
- First to incorporate USB (Universal Serial Bus) Input
- Proprietary HQVF Video Circuit provides the highest quality video images
- Component Video Inputs (Y/Video, C/R-Y, B-Y) for DVD player
- Best XGA LCD Projector for Workstation Applications

WELLS-GARDNER
ELECTRONICS CORPORATION

PLC-9000N
MECHANICAL SPECIFICATIONS

ISO 9001
certificate № 0104

SANYO

SPECIFICATIONS

Brightness	1500 ANSI Lumens (Typical); 3000 ANSI Lumens when Twin Stacked
Uniformity	Greater Than 85% (center to corner)
Contrast Ratio	Greater Than 300:1
Panel	1.8" Polysilicon TFT (x3)
Panel Resolution	1024 x 768 dots
Number of Pixels	2,359,296 (786,432 x 3)
Projection Lamp	400-Watt Metal Halide:
Keystone Correction	0° to 10°/10° to 0°
Projection Lens	f2.5 ~ 3.2 Lens with 1.77" ~ 2.95" Motor Zoom & Focus
Projection Image	Adjustable from 30" to 600" (Diagonal) Size
Throw Distance	3.6' to 70.8'
Zoom/Focus	Powered; 1:1.6 Zoom
Color Systems	PAL/SECAM/NTSC/NTSC4.43
Computer Compatibility	SXGA, XGA,SVGA,VGA,MAC,PC98
Scanning Frequency	Horiz. Sync. to 100kHz, Vert. Syn. to 100Hz
Dot Clock	140MHz
Sound Output	Two-Piece, Three-Watt Stereo
Voltage	100-120V AC, 200-240V AC; 50/60Hz
Power Consumption	550 Watts
Dimensions (WxHxD)	14.9" x 8" x 21"
Weight	26.5 Lbs.
Optional Accessories	Long-Throw Lens

The PLC-9000N is just part of SANYO's full line of LCD projectors. To make any presentation more presentable, trust SANYO, the leader in presentation technologies.

Because its products are subject to continuous improvements, Sanyo reserves the right to modify product design and specifications without notice and without incurring any obligations. © Copyright 1997, Sanyo Presentation Technologies

WELLS-GARDNER
ELECTRONICS CORPORATION

PLC-SU10N

The Mobilite™ Pro

PLC-SU10N
PRODUCT SPECIFICATIONS

MAIN FEATURES

- Fully Featured Ultramobile SVGA Multimedia LCD Projector
- Ultracompact Size: Only 9 Pounds, Footprint Under One Square Foot
- Built-In PCMCIA Slot for Displaying JPEG, BITMAP, PowerPoint®, and Digital Still Camera Images from a SmartMedia® Card
- 600 ANSI Lumens (Typical)
- Fully Featured:
  - 1 20-Watt Ultra High Power (UHP) Lamp
  - Proprietary Digital Realized Interpolation Technology (DRIT) —Elegant Compression
  - Polarized Beam Splitter (PBS) Optical System
  - Powered Zoom and Focus
  - International Capability: Multivoltage, Multilanguage Displays, and Four Color System
  - Lightweight but Durable Magnesium Alloy Cabinet
  - Includes Media Card Imager® Software

ISO 9001
certificate № 0104

WELLS-GARDNER
ELECTRONICS CORPORATION

PLC-SU10N
MECHANICAL SPECIFICATIONS

ISO 9001 REGISTERED QUALITY certificate № 0104

SANYO

PLC-SU10N—MOBILITE PRO™
Ultramobile SVGA Multimedia
LCD Projector Offering
Stellar Video Performance

Other Features:

- Rear-Screen and Ceiling-Mounted Capabilities
- Recessed Lens
- 5.3' to 64' Throw Distance
- Highest Contrast Ratio in Its Class—300:1
- 10:0 Up/Down Ratio
- Digital Zoom and Expansion
- Graphic User Interface (GUI) On-Screen Menus
- Track Pad Infrared Remote Control

SPECIFICATIONS

Type	SVGA (800 x 600) Multimedia
Brightness	600 ANSI Lumens (Typical)
Uniformity	Over 85%
LCD Panel System	0.9" TFT (Thin Film Transistor) Polysilicon x 3
Number of Pixels	1,440,000
Contrast Ratio	300:1
Projection Lens	f1.42 to 2.27, F2.3" to 3.0"
Projection Image (Dia.)	30" to 300"
Aspect Ratio	4:3 and 16:9
Throw Distance	5.3' to 64'
Zoom/Focus	Powered
Zoom Ratio	1:1.6
Keystone Correction	10:1
Projection Lamp	120 Watt Ultra High Power
Scanning Frequency	H Sync: 15-100kHz V Sync: 50-100Hz
OverScan (Video Mode)	4% H; 3% V
Dot Clock	140MHz
Up/Down Ratio	10:0
Color System	PAL/SECAM/NTSC/NTSC4.43
Computer Compatibility	XGA/SVGA/VGA/MAC/PC98
Sound Output	1.0-Watt Mono
Voltage	100-120 Volt or 200-240 Volt AC, 50/60Hz
Power Consumption	180 Watts
Dimensions (WxHxD)	8.5" x 4.3" x 12.4"
Net Weight	9 Pounds
Warranty	Two Years Parts and Labor; 90 Days Lamp

Because its products are subject to continuous improvements, Sanyo reserves the right to modify product design and specifications without notice and without incurring any obligations. © Copyright 1997, Sanyo Presentation Technologies

WELLS-GARDNER
ELECTRONICS CORPORATION

PLC-8810N

The ProEx

PLC-8810N
PRODUCT SPECIFICATIONS

MAIN FEATURES

- 600 ANSI Lumens (Typical)
- 120-Watt Ultra High Power (UHP) Lamp
- Proprietary Digital Realized Interpolation Technology (DRIT)—Elegant Compression
- 85% Uniformity
- Power Zoom/Power Focus
- Auto Image Feature
- Compact Size: 13 Pounds

REGISTERED ISO 9001 QUALITY
certificate № 0104

WELLS-GARDNER
ELECTRONICS CORPORATION

PLC-8810N
MECHANICAL SPECIFICATIONS

ISO 9001 REGISTERED QUALITY certificate № 0104

SANYO

PLC-8810N—ProEx True-XGA Multimedia LCD Projector

Other Features:

- Rear-Screen and Ceiling-Mount Capabilities
- Retractable Lens
- Graphic User Interface (GUI) On-Screen Menus
- Polarized Beam Splitter (PBS) Optical System
- International Capability: Multivoltage, Multilanguage Displays, and Four Color System
- Track Pad Infrared Remote Control
- Optional Carry-On Case

SPECIFICATIONS

Type	XGA (1024 x 768 Dots) Multimedia
Brightness	600 ANSI Lumens (Typical)
Uniformity	85%
LCD Panel System	1.3" TFT (Thin Film Transistor) Polysilicon x 3
Number of Pixels	2,359,296
Contrast Ratio	250:1
Projection Lens	f2.5 to 3.2; F1.8" to 3.0"
Projection Image (Dia.)	20" to 400"
Aspect Ratio	4:3 and 16:9
Throw Distance	3.6' to 47'
Zoom/Focus	Powered
Zoom Ratio	1:1.6
Projection Lamp	120 Watt Ultra High Power
Scanning Frequency	H Sync: 15-80kHz V Sync: 50-100Hz
OverScan (Video Mode)	4% H; 3% V
Dot Clock	135MHz
Up/Down Ratio	8:1
Color System	PAL/SECAM/NTSC/NTSC4.43
Computer Compatibility	SXGA/XGA/SVGA/VGA/MAC/PC98
Sound Output	2.0-Watt Stereo
Voltage	100-120 Volt or 200-240 Volt AC, 50/60Hz
Power Consumption	200 Watts
Dimensions (WxHxD)	10.2" x 6.3" x 15.4"
Net Weight	13 Pounds
Warranty	Three Years Parts and Labor; 90 Days Lamp

Because its products are subject to continuous improvements, Sanyo reserves the right to modify product design and specifications without notice and without incurring any obligations. © Copyright 1997, Sanyo Presentation Technologies

WELLS-GARDNER
ELECTRONICS CORPORATION

PLC-XR70N

True-XGA Multimedia Projector

ISO 9001 REGISTERED QUALITY
certificate № 0104

PLC-XR70N
PRODUCT SPECIFICATIONS

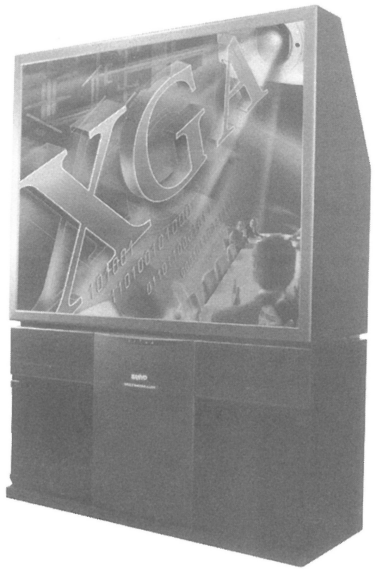

MAIN FEATURES

- True XGA (1024 x 768)/Compressed SXGA?DVD?Electronic Workstation (EWS) Multimedia Projector
- 70" (Dia.) Large-Screen Rear Projection
  250 NIT
- Over 85% Uniformity
- Three 1.3" TFT Polysilicon LCD Panels
- 120W UHP Lamp
- Proprietary Digital Realized Interpolation Technology (DRIT) — Elegant Compression
- Auto Image Feature
- Intuitive Graphic User Interface (GUI) On-screen Menus
- Revolutionary Polarized Beam Splitter (PBS) Optical System
- Proprietary HQVF Video Circuit for Superior Video Image
- Component Video Inputs
- Three PC Input Terminals
- International Capability: Multivoltage, Multilanguage, Four Color System

WELLS-GARDNER
ELECTRONICS CORPORATION

PLC-XR70N
MECHANICAL SPECIFICATIONS

ISO 9001
certificate Nº 0104

SANYO

SPECIFICATIONS

Type	XGA (1024 x 768 Dots) Multimedia
Brightness	250 NIT
Uniformity	Over 85%
LCD Panel System	1.3" TFT (Thin Film Transistor) Polysilicon x 3
Number of Pixels	2,359,296
Contrast Ratio	100:1
Projection Method	One Lens, One-Miller Reflection
Projection Lens	f23.7; F2.5"
Projection Image (Dia.)	70"
Field of Angle Views	H: =/-40°, V: =/- 15°; 1/3 Brightness
Aspect Ratio	4:3
Projection Lamp	120 Watt Ultra High Power
Scanning Frequency	H Sync: 15-80kHz V Sync: 50-100Hz
OverScan (Video Mode)	4% H; 3% V
Dot Clock	135MHz
Up/Down Ratio	8:1
Color System	PAL/SECAM/NTSC/NTSC4.43
Computer Compatibility	SXGA/XGA/SVGA/VGA/MAC/PC98
Input Terminal (PC)	D-Sub 15 Pin x 3; Multipole-Control Port x 3; Stereo MiniJack x 3
Input Terminal Video (Audio)	Composite Video Y, B-Y, R-Y x 2 RCA; (L/R (RCA) x 2) Composite Video BNC x 1 RCA x 1; (L/R (RCA) x 1) Separate Y/C (Din 4 Pin) x 3
PC Terminal	Mouse/Keyboard x 3 (mini Din 6 Pin x 2, Mini Din 4 Pin x 1)
Sound Output	10-Watt Stereo
Voltage	100-120 Volt or 200-240 Volt AC, 50/60Hz
Power Consumption	210 Watts
Dimensions (WxHxD)	59.9" x 78.8" x 29.5"
Net Weight	220 Pounds
Warranty	Three Years Parts and Labor; 90 Days Lamp

Because its products are subject to continuous improvements, Sanyo reserves the right to modify product design and specifications without notice and without incurring any obligations. © Copyright 1997, Sanyo Presentation Technologies

WELLS-GARDNER
ELECTRONICS CORPORATION

DATA/GRAPHICS PROJECTOR

PRO 900

FEATURES

- 800 Lumens
- Trackball Remote Control
- Super Data
- 1024 x 768 RGB Resolution
- 1920 x 1030 HDTV Resolution
- Three Dimensional Digital Comb Filter
- Digitally Controlled Convergence

DIMENSIONS

- 12.9"W,, 25.75"H,, 33.28"D

ZENITH®

REGISTERED ISO 9001 QUALITY
certificate № 0104

WELLS-GARDNER
ELECTRONICS CORPORATION

DATA/GRAPHICS PROJECTOR

ISO 9001 REGISTERED QUALITY certificate № 0104

WG P/N: 02548002-001

OPTICAL

Projection System CRT; 7 inch High Performance Liquid Cooled Tubes, 5 inch active phosphor area, 90 degree deflection angle, Super Oxide Cathodes

Lenses High Resolution color corrected multilayered coating hybrid lens system. fl.03 Aperture

Light Output 800 Lumens peak light output

Convergence Digital controlled analog with 10 factory preset and 5 customer memory locations plus copy function feature (full digital convergence with upgrade module)

Self Generated Set Up Patterns Cross Hatch (coarse and fine). Convergence Color pattern, Static Adjust

INPUT

RGB Inputs 5 - BNC Analog (RGB HN) with full VGA and VESA Super VGA tracking compatibility

Composite Video Input 1.0 Vp-p 75 Ohm (BNC jack), loop through (NTSC 3.58, NTSC 4.43, PAL M/N, PAL B/G)

S-Video Input Y:: 1.0 Vp-p 75 Ohm C: 0.28 Vp-p Color Burst Level (via Mini Din)

Data Communication Port RS232 serial port

Power Input Dual Range Power Supply 90-137 VAC, 180-264 VAC, 47-63 HZ

VIDEO FEATURES

- Three Dimensional Digital Comb Filter
- Two Dimensional Picture Sharpness Circuitry
- Digital Dynamic Video Noise Reduction
- Color Transient Improvement
- Black Level Expansion
- Auto Flesh Tone Correction
- Video Edge Enhancement
- Color Noise Reduction
- Advanced Video DSP with 5 megabit of memory
- Extra Wide band Video Amplifiers
- High Resolution AKB with programmable white balance control
- Gamma Correction
- Picture setup via source selection
- WorldWide Multi-standard Video System (PAL M/N, PAL B/G, NTSC)
- Digital Aspect Ratio Correction
- Multi-Frequency, Multi-Format High Definition System (15 to 50kHz, 75 MHz dot clock)
- Addressability via IR for multiple projection unit applications
- On Screen Display capable of 1 3x32 character display resolution

GENERAL

Horizontal Scan Frequency 15.0 - 50.0 kHz
Vertical Scan Frequency 40.0 - 100 Hz
Retrace Time Horizontal: < 3.5 uS (15.0 - 50.0 kHz))
Vertical: < 450 uS (40.0 -100 Hz)
Bandwidth 40 MHz (--3DB))

RGB Resolution 1920x 1080 HDTV, 1024x768 Data

Video Resolution 800 TV Lines

Size Adjustable 60 - 240 inches diagonal

Screen Configuration Front or rear, floor or ceiling mount, with simple scan reversal

Color Balance Four user selectable settings 3200/ 6500K / 9300K / Custom

High Voltage 32 KV
Power Consumption 600 watts Max

Weight 43.13 kg / 95 lbs.

Environment Operating Temperature: 0 to 40 degrees Celsius Humidity: 0 to 90 percent non condensing Storage: - 10 to 50 degrees Celsius

SAFETY AND REGULATION

- UL: Complies with UL 1950 and NOM . IEC: Governed by IEC 950
- CSA: Complies with CSA 950
- FCC: Complies with FCC Class " B" . European: CE Mark (PRO910); Japan: VCCI (PRO910)
- DHHS: Complies

Mechanical Dimensions 12.90 inches (H), 25.75 inches (W), 33.28 inches (D)

Remote Control System Two IR Receivers on the Projector for front and rear remote access. Full menu for Remote control of convergence with installation transmitter Operator remote point and click track ball, Microsoft mouse emulation

Accessories

- Installation Remote with Convergence Access. Operator remote with Trackball feature
- AC line cord (3 meter). Installation and User Manual

Supported Formats NTSC (3.58). NTSC (4.43).PAL M, N, B, G. VGA (IBM standard). SVGA (VESA standard, 1024 x 768). Mac II (640 x 480, 3 SkHz). Grand Alliance HDTV Formats. 1280 x 720, progressive, 16 x 9 aspect ratio. 1920 x 1080, interlaced, 16 x 9 aspect ratio per SMPTE specification, tri-level sync

WELLS-GARDNER
ELECTRONICS CORPORATION

GRAPHICS ANIMATION PRESENTATION PROJECTOR ACCESSORIES

ISO 9001 REGISTERED QUALITY certificate № 0104

LAMP ASSEMBLIES

PART#	DESCRIPTION
610 260 7208	Replacement Lamp Assembly PLC-200N
610 254 5593	Replacement Lamp Assembly PLC-220N
610 259 0562	Replacement Lamp Assembly PLC-250N
645 003 6194	Replacement Lamp Assembly PLC-300M
610 254 5609	Replacement Lamp Assembly PLC-320M
610 257 6269	Replacement Lamp Assembly PLC 400N/500/510M
610 264 1196	Replacement Lamp Assembly PLC-550M/PLV20N
610 259 5291	Replacement Lamp Assembly PLC-700M/750M
610 264 1943	Replacement Lamp Assembly PLC-5500N/5500NA
610 264 8828	Replacement Lamp Assembly PLC-8800N/5600N

REMOTE CONTROLS

PART#	DESCRIPTION
RC-350	Wired Remote Control PLC-500M
645 0166 0929	Remote Control PLC-5 I 0 M/400N/550M/PLV-20N 5 011 9859 Remote Control PLC-, 700M/750M
645 020 7082	Remote Control PLC-5500N
645 024 8429	Remote Control PLC-5500NA
645 024 8764	Remote Control PLC-800N

CARRYING CASES

PART#	DESCRIPTION
PLCCSE01	Carrying Case PLC-200N Series
PLCCSE02	Carrying Case PLV-20N/PLC 400N/500M Series
PLCCCSE03	Carrying Case PLC-500N Series
PLCCSE04	Soft Carrying Case PLC-8800N/5600N (This case also has an area for carrying a laptop and cables)
PLCCSE05	Hard Carrying Case PLC-8800N/5600N
PLCCSE06	ATA Shipping Case PLC-8800N/5600N

MISC

PART#	DESCRIPTION
MAC-PAC	Macintosh cable and software allows you to send PIC or Quickline files to the GVR-S955 frame by frame

WELLS-GARDNER
ELECTRONICS CORPORATION

GRAPHICS ANIMATION PRESENTATION PROJECTOR ACCESSORIES

ISO 9001
certificate № 0104

SANYO

PRESENTATION TECHNOLOGIES

PLC-9000N Accessories

Large venue, True XGA (1024 x 768), Electronic Work Station (EWS) compatible, 1 500 ANSI lumens, 3000 ANSI Lumens stacked, 85% uniformity, Revolutionary Digital Realized Interpolation Technology (DRIT) for elegant compression and SVGA expansion, DVD inputs. Detachable cartridge-type EWS adapters, Universal Serial Bus (USB), 30" - 600" diagonal image size, Contrast ratio 300:1, Power zoom and focus.

LAMP ASSEMBLY

PART #	DESCRIPTION
610 270 6796	Replacement Lamp Assembly

REMOTE CONTROL

PART #	DESCRIPTION
645 028 5950	Remote Control IR
645 029 2194	Remote Control Wired

SHIPPING / CARRYING CASE

PART #	DESCRIPTION
PLCCSE07	Shipping / Carrying Case

OPTIONAL LENSES

PART #	DESCRIPTION
PLC-LNS02	Short
PLC. LNS01 1	Medium
PLC-LNS03	Large
PLC-PC01	Interface Module HD-IS
PLC-PC02 2	Interface Module BNC (RGBHU)
PLC- PC03	Interface Module 13W3

SERVICE CENTERS

AMA Distributors
1525 Airline Highway
Metaire, La. 70001
Phone: 504-835-3232
Fax: 504-835-9594

C.A. Robinson & Co.
180 Utah Avenue
S. San Francisco, Ca. 94080
Phone: 650-871-4280
Fax: 650-588-8538

Laniel Canada, Inc.
7101 Trans-Canadienne
S.-Laurent, Quebec H4T1A2
Phone: 514-336-5050
Fax: 514-332-1739

New England Coin-Op
232 Vanderbilt Avenue
Norwood, Ma. 02062
Phone: 800-274-6326
Fax: 781-762-8225

RBA Inc.
663 Orly Ave
Dorval, Quebec H9P1G1
CANADA
Phone: 514-336-5403
Fax: 514-733-2377

Trident Gaming PTY LTD
ACN 082 851 732 Lot 6 Pile Road
Somerby NSW 2250 AUSTRALIA
Phone 1-612-4340-4577
Fax 1-612-4340-4578

Wells-Gardner
2701 N. Kildare
Chicago, Il. 60639
Phone: 800-336-6630
Fax: 773-252-8299

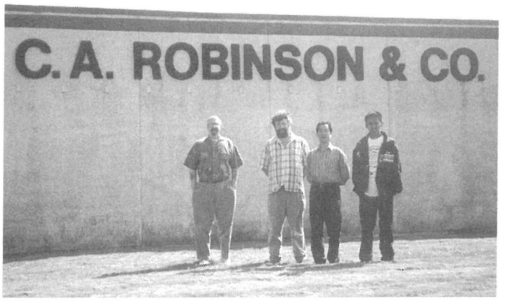

Re-Mfg Distributors

AMA Distributors
1525 Airline Highway
Metaire, La. 70001
Phone: 504-835-3232
Fax: 504-835-9594

C.A. Robinson & Co.
180 Utah Avenue
S. San Francisco, Ca. 94080
Phone: 650-871-4280
Fax: 650-588-8538

James Industries
1619 Colonial Parkway
Inverness, Il. 60067
Phone: 847-358-8000
Fax: 847-358-7851

Mazzco
500 Eastern Avenue
Bensenville, Il. 60106
Phone: 800-292-4491
Fax: 800-671-2349

New England Coin-Op
232 Vanderbilt Avenue
Norwood, Ma. 02062
Phone: 800-274-6326
Fax: 617-762-8225

Trident Gaming PTY LTD
ACN 082 851 732 Lot 6 Pile Road
Somerby NSW 2250 AUSTRALIA
Phone 1-612-4340-4577
Fax 1-612-4340-4578

WELLS-GARDNER
ELECTRONICS CORPORATION

MONITOR TERMINOLOGY

REGISTERED ISO 9001 QUALITY
certificate № 0104

CAP KIT:	Consists of various values of electrolytic capacitors.
CHASSIS:	The main deflection board where most of the monitorís circuits and components are located. Usually there is a label on the board identifying the monitor. There will be a "WGM" or a "WGT" number, which is the release number of that monitor. On the same label there is a "054A" number, which is the chassis prep for that release number.
CHASSIS PAN:	The mounting surface for the chassis. It is a sheet metal subassembly that has studs or standoffs for mounting the deflection board.
CGA:	Stands for computer graphics adapter. This is a computer standard for video and sync signals going to a monitor. Also known as standard resolution which means using a horizontal frequency of 15KHZ.(KHZ is thousands of cycles per second of signal)
COMPOSITE SYNC:	This is a combination of the horizontal sync and the vertical sync signals. These signals are needed to keep the picture from rolling. Composite sync is used in most video arcade games.
CONTROL BOARD:	As the name suggests this board has the different controls for the monitor on it. The board is connected to the chassis or (deflection board) by a long cable assembly. Some of the controls are for brightness or (black level), contrast, horizontal size, vertical size, and vertical hold. This board is sometimes called "The satellite board", by people in the field, repairing monitors.
CONVERGENCE:	This is a procedure using the yoke and the convergence rings to align the red, green, and blue guns in the picture tube. Usually a crosshatch pattern is used so that the three colors can be seen moving vertically and horizontally until they come together or converge.
CONVERGENCE RINGS:	Part of the ring assembly on the neck of the picture tube. There are two pairs of rings used to adjust or converge the three guns in the picture tube.
CRT:	Stands for cathode ray tube, which is the picture tube. Some people will refer to the whole monitor as the crt or the crt display.
DEFLECTION BOARD:	Sometimes referred to as the main board, chassis or chassis board, or monitor board. This is where the video signal usually plugs into. This board processes sync signals, and provides high voltage and deflection to get a full screen picture on the picture tube.
DEGAUSS COIL:	This is a coil of wire mounted to the picture tube that, uses AC voltage to demagnetize the tube when the monitor is turned on. This is done because if the picture tube gets magnetized the purity will off and the color on the screen will not be uniform. Picture tubes can also be degaussed manually with a hand held degaussing coil.
ELECTRON GUN:	Referred to as "gun" for short. There are three electron guns in the neck of the picture. There is one gun for each color; red, green, and blue.
FILAMENT:	Sometimes called the heater; this is a piece of metal in the neck of the picture tube that glows like the element in a toaster. The glowing filament heats up the guns in the tube and causes electricity to be forced to the front of the tube. This heating time is why there is a delay from power up to when the picture appears on the screen.
FLYBACK TRANSFORMER:	Provides high voltage, filament voltage, focus, and brightness to the picture tube and is located on the deflection board. Also called the high voltage transformer.
GENERATOR:	Provides the video and sync signals to the monitor so that a test pattern can be seen on the screen for testing purposes. (GENIE ONE)

WELLS-GARDNER
ELECTRONICS CORPORATION

MONITOR TERMINOLOGY

ISO 9001 REGISTERED QUALITY
certificate № 0104

GEOMETRY: This is the overall shape of the raster; involving the left and right sides. Poor geometry is when the sides are bowed out (barreled) or curved inward (pinned). Good geometry is when the sides are straight up-and-down. On some sets this is done with the yoke and other sets have controls for correction.

GET WELL KIT: This is a kit of parts used to fix a problem.

HORIZONTAL DEFLECTION: Provided by the deflection yoke with a signal from the deflection board, giving the picture horizontal size.

HORIZONTAL MOUNT: This is a mounting scheme whereby the picture tube is in the horizontal position. There are two side brackets with handles in them that the picture tube mounts to with four screws.

HORIZONTAL PHASE: Sometimes called horizontal centering, position, or shift; this is a control that moves the picture to the left or to the right.

ISOLATION TRANSFORMER: Used on the K7000 and K8000 monitors to help prevent electric shock to people working on them and to help keep the monitor from being damaged. The transformer isolates the monitor from the hot side of the AC line voltage coming from the power company.

LOW EMISSION: The guns in a picture tube get weak and result in a dim picture or one gun will be weak and that color will not be as bright as the other colors.

MAIN BOARD: Another name for the deflection board. Usually the largest board in the monitor and where most of the electronics is located.

MEDIUM RESOLUTION: Sometimes referred to as "Mid Res", is a monitor that has a horizontal frequency of 25KHZ. (K8000, U5000, K7500, 33K3201)

NECK BOARD: The board that fits on the neck of the picture tube. It has the video output circuits on it.

NTSC: This is a video signal standard used on some monitors and is also used in televisions. This is composite video where the video and sync signals come to the monitor on one line.

PC BOARD: Often called a "PCB", which stands for printed circuit board. This is where the electronics is including components and foil traces to complete the circuits.

POTENTIOMETER: Also called a "POT" for short and is used to set voltages or control functions of the monitor.

POWER SUPPLY: Provides the power to operate the monitor. Uses AC voltage from the power company as the input and the output is a DC voltage which is the "B+" voltage to operate the monitor.

PURITY: This involves adjusting the purity rings and the yoke to get a uniform color over the entire screen.

PURITY RINGS: Part of the ring assembly, which includes the convergence rings and is mounted on the neck of the picture tube. The purity rings are used to center the raster and to adjust center purity on the picture tube. They are the pair of rings closest to the yoke.

REFURB: This is a monitor that was returned or bought back and updated by changing parts or boards and tested like a production unit. The price is less than a new monitor and the warranty is 90 days rather than one year for new monitors.

REJUVENATE: Some older picture tubes develop low emission making the picture dim or weak. These tubes can be connected to a machine (tube tester or rejuvenator) that can sometimes gives the tube more life and makes the picture brighter. This process is not permanent.

WELLS-GARDNER
ELECTRONICS CORPORATION

MONITOR TERMINOLOGY

ISO 9001 REGISTERED QUALITY
certificate № 0104

RGB:	Stands for red, green, and blue. This is the form of video that the monitors use. If the monitor uses an NTSC board, the output is RGB going to the monitor.
RING ASSEMBLY:	Three pairs of rings on the neck of the tube used for setting convergence and purity. These rings are actually magnets.
SHADOW MASK:	A thin piece of metal built into the picture tube near the front and behind the phosphor, and passes the beam from the gun assembly to the front of the tube. Can be damaged by shock or warped by heat if the brightness is set too high and this causes dark areas in the picture.
SHORT CIRCUIT:	This is synonymous with a piece of wire. The least resistance to electricity. Electric current flows through it, but there is no voltage across it.
STANDARD RESOLUTION:	Sometimes referred to as "Low Res", is a monitor that operates at 15KHZ horizontal frequency. (U2000, K7000, K7200, K7300, K7400)
SYNC:	This is a signal from a game or a generator that locks the monitor to the correct frequency for a usable picture.
TOUCH SCREEN:	A transparent panel that is taped or bonded to the picture tube and is operated by touching it with your finger.
TOUCH SCREEN CONTROLLER:	The touch screen controller sends signals to and receives signals from the touch screen.
UNIVERSAL MOUNT:	Universal mount monitors can be mounted in different configurations. There is a bracket on the top and one on the bottom of the picture tube. There are two "U" channel brackets that can be mounted in different positions on the top and bottom brackets.
VERTICAL DEFLECTION:	Provided by the deflection yoke with a signal developed on the deflection board and gives the picture vertical size.
VERTICAL MOUNT:	The mounting brackets are similar to the horizontal mount with the picture tube rotated 90 degrees, so that the long sides of the picture tube are up-and-down instead of side-to-side.
VGA:	Stands for video graphics adapter and includes various modes of resolution. The monitors that operate at VGA will work in modes 1, 2, and 3 and some will work in mode 4, which is SVGA or SUPER VGA (800 x 600 mode).
WIDTH COIL:	Located on the deflection board and is adjusted to set the horizontal size.
YOKE:	The yoke is cone shaped with coils of wire for vertical and horizontal deflection of the picture and is located on the neck of the picture tube. The yoke is adjusted when setting purity and convergence.
YOKE TABS:	Strips with a magnet at one end and an adhesive at the other end. They are applied to the picture tube around the yoke to improve the convergence near the edges of the tube when needed.

TERMS AND CONDITIONS

1. **PURCHASE ORDERS** Any purchase order submitted by Purchaser and all sales to Purchaser shall be subject to and governed solely by the standard terms and conditions of sale set out herein and are subject to acceptance by Wells-Gardner Electronics Corporation at its office in Chicago, Illinois. Any provisions, conditions, or terms contained in such purchase order which are in addition to or not consistent with these standard terms and conditions of sale are null and void and not binding on Wells-Gardner Electronics Corporation ("Seller" in or the "Company"). Purchase orders and change purchase orders shall contain the following information: (I) identity of product by model number, (II) quantity ordered, (III) specific shipment dates which must be within the terms of this agreement, (IV) shipping instructions. The Company will not be bound by purchase orders issued to its Sales Representative(s) as the Vendor.

2. **TERMS OF SALE** All shipments are made F.O.B. Seller's manufacturing location, freight collect, unless otherwise specified.

3. **TERMS OF PAYMENT** Terms of payment are net thirty (30) days from the date of shipment or date of invoice, whichever is later. Seller reserves the right to charge interest at one and one-half percent (1 1/2%) per month from invoice date after thirty (30) days. Also, Seller reserves the right to demand payment prior to shipments if Purchaser fails to pay for any goods previously delivered when due or if, in Seller's judgment, Purchaser's financial condition warrants payment prior to shipment.

4. **TAXES** The prices set forth herein do not include any amount for federal, state, or local excise, sales, use, service, occupation, gross income, property, or similar taxes. If any such taxes are determined to be applicable to this transaction or Seller is required to pay or bear the burden thereof, the prices set forth herein shall be increased by the amount of such taxes and any interest or penalty thereon, and Purchaser shall pay to Seller the full amount of any such increase no later than thirty (30) days after the receipt of an invoice. In order for any shipment to be exempted from any such applicable taxes, a properly executed tax exemption certificate must be on file with Seller.

5. **WARRANTY** Monitors sold by Seller are warranted to the original Purchaser only for a period of one year from the date of Seller's shipment against defects in material and workmanship under normal use and operation. Seller's sole and exclusive obligation is to repair or replace at Seller's option any defect warranted against, provided that Seller receives written notice of the defect during the period of warranty and Purchaser receives written authorization for return to Seller. Any defective item or items are to be returned at Purchaser's expense to Seller, 2701 North Kildare Avenue, Chicago, Illinois 60639. The expense of removal and installation of any item or items of equipment is not included in this warranty. Purchaser's sole and exclusive remedy for defective equipment is to have such equipment repaired or replaced by Seller.

Warranties of fitness for a particular purpose and merchantability are hereby excluded. There are no other warranties or guarantees, express or implied, other than those stated above.

Seller shall have no obligation under this agreement to make repairs or replacement necessitated by fault, misuse, negligence or accident of Purchaser or other users.

6. **SCHEDULING** In the event that Purchaser, for any reason other than a default on the part of the Seller, has not instructed Seller to ship all of the equipment specified in the purchase order within one (1) year from the date of issuance of such purchase order, Seller will calculate the difference between the price payable by Purchaser for the quantity of equipment actually shipped within one (1) year from the date of issuance of such purchase order and the price provisionally invoiced based on the amount of equipment which Purchaser originally estimated purchasing (as evidenced by the quantity of equipment specified in the purchase order), and Seller will charge and invoice Purchaser accordingly for the equipment already shipped. Payment of invoices for such charges shall be made in accordance with paragraph 3 above.

7. **RESCHEDULES** Units scheduled for shipment within thirty (30) days of current date are not subject to rescheduling. Seller reserves the right to charge an inventory carrying cost fee of two percent (2%) per month on sales price for any order which is delayed more than sixty (60) days from scheduled ship date.

8. **PATENTS** Seller shall defend any suit or proceeding brought against Purchaser insofar as such a suit is based on a claim that the Seller's equipment or any part of it furnished under our agreement constitutes an infringement of any patent of the United States, if Purchaser promptly notifies Seller in writing of the charge of infringement or threat of suit, if there be such and if Purchaser gives Seller authority, information and assistance for the defense.

9. **GOVERNING LAW** This Agreement shall be in all respect, governed by and construed and enforced in accordance with the laws of the State of Illinois (excluding the International Convention for the Sale of Goods), including all matters of construction, validity and performance and no modifications hereof shall be effective unless they are agreed upon in writing by the Seller. Any action to enforce or interpret the terms of this Agreement shall be instituted and maintained in either the Circuit Court of Cook County, Illinois or in the United States District Court for the Northern District of Illinois. Purchaser hereby consents to the jurisdiction of such court and waives any objections to such jurisdiction. In any action or proceeding arising out of this Agreement, the party prevailing in such action shall be entitled to recover its reasonable attorney's fees and costs.

10. **RELEASES** Production releases can be initiated within ninety to one hundred twenty (90-120) days after receipt of order, or sooner depending on availability of materials and other production scheduling.

11. **FORCE MAJEURE** Seller shall not be liable for delays in shipment or default in delivery for any cause beyond Seller's reasonable control, including, but not limited to, the following: (a) fires, floods or other casualties; (b) wars, riots, civil commotion, embargos, governmental regulations or martial law; (c) Seller's inability to obtain necessary materials from its usual sources of supply; (d) existing or future strikes or other labor troubles affecting production or shipment, whether involving employees of Seller or employees of others, regardless of responsibility or fault on the part of the employer; or (e) other contingencies of manufacture or shipment. In the event of any delay in Seller's performance due in whole or in part to any cause beyond Seller's reasonable control, Seller shall have such additional time for performance as may be reasonably necessary under the circumstance. Acceptance by Purchaser of any goods shall constitute a waiver by Purchaser of any claim for damages on account of any delay in delivery of such goods.

12. **DELIVERY** Delivery of goods by Seller to the carrier shall be deemed delivery to Purchaser and thereupon title to such goods and risk of loss or damage shall be Purchaser's. Any claim by Purchaser against Seller for shortage or damage occurring prior to such delivery must be made in writing within five (5) days after receipt of shipment and accompanied by original transportation bill signed by carrier noting that carrier received goods from Seller in the condition claimed.

13. **RETURNS** No shipments will be accepted for return unless prior written authorization has been granted by Seller. Authorization for return does not constitute acceptance by Seller of any responsibility for material returned beyond review thereof. Material accepted back by Seller for re-inspection, rework, or other processing, is with Seller only on consignment, and such acceptance back shall not be construed as a return for credit.

14. **ERRORS** Stenographic and clerical errors made by Seller in bids, estimates and quotations are subject to correction.

15. **TERMINATION AND CANCELLATIONS** Purchaser may terminate this contract in whole or in part upon thirty (30) days notice in writing to Seller. Seller shall thereupon, as directed, cease work and transfer to Purchaser title to all completed and partially completed products and to any raw materials or supplies acquired by Seller especially for the purpose of performing this contract, and Purchaser shall pay Seller promptly as follows: (1) the contract price for all products which have been completed prior to termination; (2) the cost to Seller of the material or work in process as shown on the books of Seller in accordance with the accounting practice consistently maintained by Seller; (3) the cost F.O.B. Seller's plant of materials and supplies acquired especially for the purpose of performing this contract; (4) reasonable cancellation charges, if any, on account of Seller commitments made hereunder; and (5) a cancellation charge of thirty percent (30%) of the total amount due from Purchaser to Seller under any outstanding purchase order.

16. **LIMITATION OF LIABILITY** In no event shall Seller be liable for any incidental, special, punitive or consequential damages including but not limited to lost profits, to Purchaser or any third party caused by use or sale any items of equipment, defective or otherwise, and whether defect is warranted against or not and whether based on contract, tort, strict liability or otherwise, and whether or not Seller was advised of the possibility of such damages. In no event shall Seller's liability exceed the price paid for the goods giving rise to such liability. In no event may actions for breach against Seller be commenced more than one year after cause of action occurs.

17. **WAIVER** Waiver by Seller of any breach of these terms and conditions shall not be construed as a waiver of any other breach, and failure to exercise any right arising from any default hereunder shall not be deemed a waiver of such right which may be exercised at any subsequent time.

WELLS-GARDNER
ELECTRONICS CORPORATION

2701 North Kildare • Chicago, Il. 60639
Phone: 773-252-8220 • Fax: 773-252-8299

CALL 800-336-6630 OR CHECK OUR WEB SITE: www.wgec.com

PRINTED IN U.S.A.